Service Manual

OPTIQUEST V95

Model No. VCDTS21383-1M

19" Digital Controlled Color Monitor

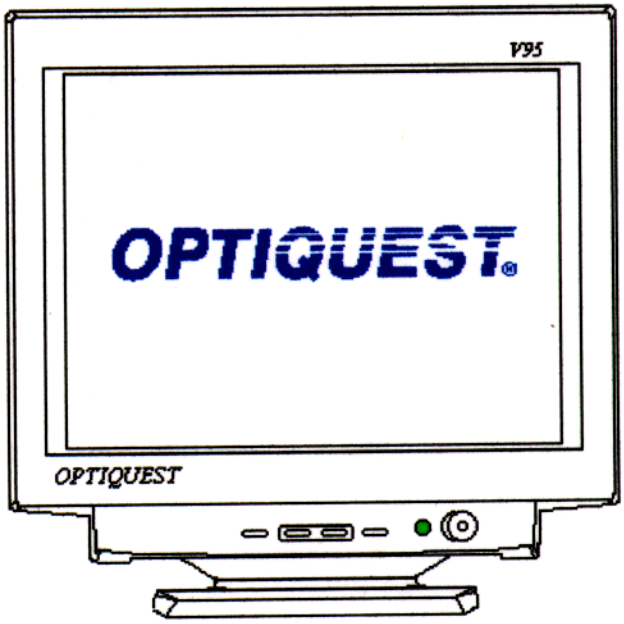

(Rev. 2 - September 1998)

Optiquest® 438 Cheryl Lane., Walnut, California 91789 USA - (800) 843-6784

Copyright

Copyright © 1998 by Optiquest Inc. All rights reserved. No part of this publication may be reproduced, transmitted, transcribed, stored in a retrieval system, or translated into any language or computer language, in any form or by any means, electronic, mechanical, magnetic, optical, chemical, manual or otherwise, without the prior written permission of Optiquest Inc.

Disclaimer

Optiquest makes no representations or warranties, either expressed or implied, with respect to the contents hereof and specifically disclaims any warranty of merchantability or fitness for any particular purpose. Further, Optiquest reserves the right to revise this publication and to make changes from time to time in the contents hereof without obligation of Optiquest to notify any person of such revision or changes.

Trademarks

Optiquest is a registered trademark of Optiquest Inc.
All other trademarks used within this document are the property of their respective owners.

Revision History

Revision	Date	Description Of Changes	Approval
1.0	8/1/97	Initial Issue	T. Sears
2.0	9/15/98	Include Service Bulletins	T. Sears

TABLE OF CONTENTS

Safety Notices ..... Preface

1. Product Specifications ..... 1-1~1-5

2. Disassembly Instructions ..... 2-1~2-3

3. Theory of Operation ..... 3-1~3-15

4. Setup Adjustments ..... 4-1~4-5

5. Troubleshooting ..... 15-1~5-11

6. Printed Circuit Board Layouts ..... 6-1~6-3

7. Schematic Diagrams 7-1

8. Mechanical Parts ..... 8-1~8-3

9. Parts List ..... 9-1~9-9

Appendix A ..... Service Bulletins

Safety Standards and Approvals

- This monitor complies with DHHS Rules 21 CFR Subchapter J Applicable at date of manufacture.
- Certified to comply with the limits for a Class B computing device pursuant to part 15 of FCC rules
- Please refer to instructions included FCC notice in the user's manual if this equipment is suspected of causing interference to radio reception.

Important Safety Notice

This equipment contains special components which are important for safety. These critical parts should only be replaced with the parts specified by the manufacturer in order to prevent X-radiation, shock, fire or other hazards. Do not modify the original design.

Confidential - Do Not Copy

Preface
Before You Start

General Safety Precautions

1. Use an isolation transformer in the power line and AC supply to troubleshoot.
2. When servicing, observe the original lead dress, especially in the high voltage circuits. If a short circuit is found, replace all parts which have been overheated or damaged.
3. Potentials, as high as 25kV are present when this display is in operation. Operation of the display without the rear cover involves the danger of a shock hazard from the display power supply. Servicing should not be attempted by anyone who is not thoroughly familiar with the precautions necessary when working on high voltage equipment. Always discharge the anode of the picture tube to the display chassis before handling the tube.
4. After servicing, be sure to check the items listed in the Safety Checkout, below before returning the serviced unit to the customer.

Safety Checkout

The following checks must be made after correcting the original service problem and before the unit is returned to the customer.

1. Check the area of your repair for unsoldered or poorly soldered connections. Check the entire board surface for solder splashes and bridges.
2. Check the inter board wiring to ensure that no wires are pinched or coated with high-wattage resistors.
3. Check that all control knobs, shields, covers, ground straps and mounting hardware have been replaced. Makde absolutely sure you have replaced all the insulators.
4. Look for any unauthorized replacement parts, particularly transistors, that may have been installed dueing a previous repair. Point them out to the cusstomer land recommend their replacement.
5. Look for parts which, though functioning, show obvious signs of deterioration. Point them out to the customer and recommend their replacement.
6. Check the line cord for cracks and abrasion. Recommend the replacement of any such line cord to the customer.
7. After making any repair, check the B+ and HV to see whether they are at the values specified. Make sure your instruments are accurate; if your HV meter always shows a low HV, check the meter to ensure it is not malfunctioning.
8. Carry out the leakage current checks as detailed below overleaf.

Leakage Current Cold Check

1. Unplug the AC cord and connect a jumper between the two prongs on the plug.
2. Turn on the display power switch.
3. Use an ohmmeter to measure the resistance value between the jumpered AC plug and each exposed metallic cabint part on the display, such as screwheads, terminals control shafts, etc. When an exposed metallic part has a return path to the chassis, the reading should be between 240k and 5.2M. When exposed metal does not have a return path to the chassis, the reading must be.

Confidential - Do Not Copy

Leakage Current Hot Check

1. Plug the AC cord into the AC outlet. Do not use an isolation transformer for this check.
2. Connect a 1.5k, 10 watt resistor in parallel with a 0.15F capacitor between each exposed metallic part on the set and a good earth ground (see How to Find a Good Earth, below) as shown in the diagram below.

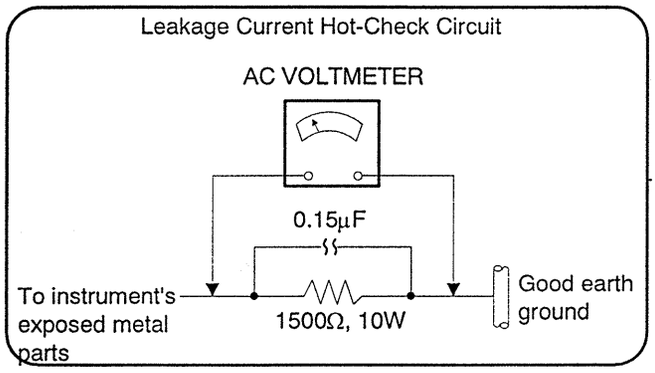

Example of Leakage Current Hot-Check Circuit

3. Use an AC voltmeter with 1000 ohms/volt or more sensitivity to measure the potential across the resistor.
4. Check each exposed metallic part, and measure the voltage at each point.
5. Reverse the polarity of the AC plug in the AC outlet and repeat the above measurements.
6. The potential at any point should not exceed 0.75 volt RMS. A leakage current tester (Simpson Model 229, RCA WT-540A or equivalent) may be used to make the hot checks.

Leakage current must not exceed 0.5 milliamp. If a measurement is outside of the specified limit, there is a possibility of a shock hazard and the monitor should be repaired and rechecked before it is returned to the customer.

How to Find A Good Earth

A cold water pipe is a guaranteed earth ground; the cover plate retaining screw on most AC outlet boxes is also at earth ground. If the retaining screw is to be used as your earth ground, verify that it is at ground by measuring the resistance between it and a cold water pipe with an ohmmeter. The reading should be zero (0) ohms. If a cold water pipe is not accessible, connect a 60-100 watt trouble light (not a neon lamp) between the hot side of an AC power receptacle and the retaining screw. Try both slots, if necessary, to locate the hot side of the line. The lamp should light at normal brilliance if the screw is at ground potential

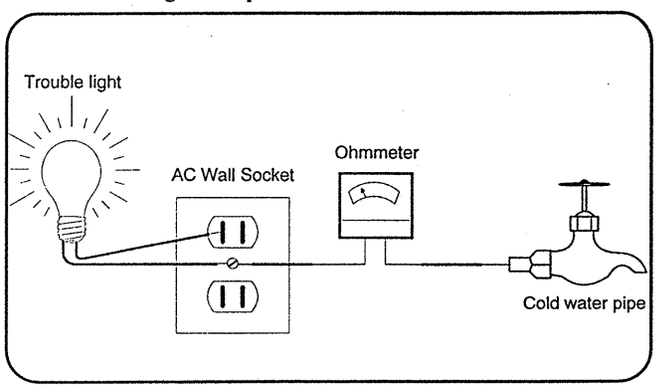

How to Check for Earth Ground

Section 1.

Product Specification

1.1. Monitor Control Locations and Functions 1-1
1.2. Product Overview 1-3
1.3. CRT Characteristics 1-3
1.4. Power Specifications 1-3
1.5. Video Specifications 1-3
1.6. Sync Input Signal Characteristics 1-3
1.7. Environmental 1-4
1.8. Preset Timing Modes 1-4

Confidential - Do Not Copy

1.1. Monitor Control Locations & Functions

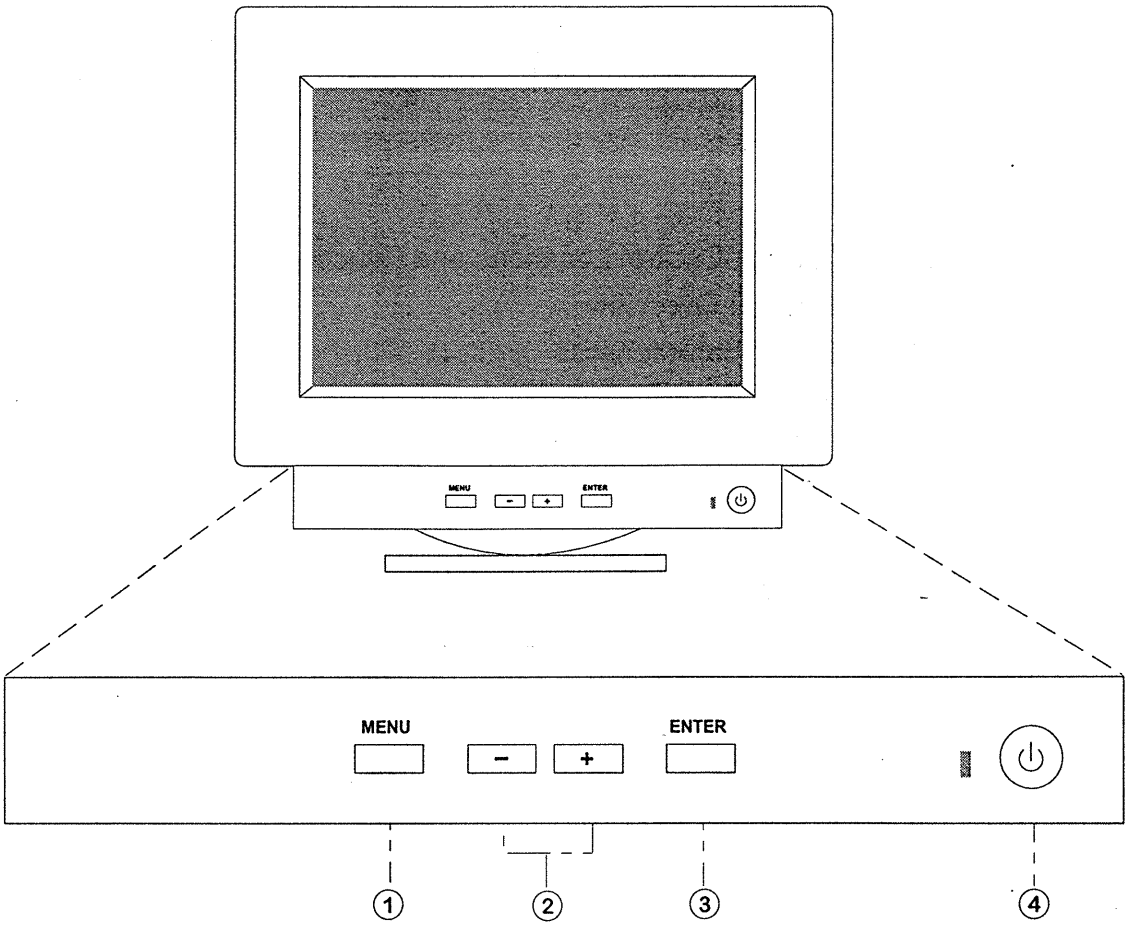

KEY TO BUILT-IN MONITOR CONTROL FUNCTIONS		
(1)	**Menu/Exit Button**	Press to access OSD function, or to exit current stage to former stage during OSD operation.
(2)	**Adjustment Button "-", "+".**	Used for contrast control during non-OSD operation, and for function icon selection and adjustment during OSD operation.
(3)	**Enter Button**	Press to confirm OSD function selection and value setting.
(4)	**Power On/Off**	Hard power ON/OFF button. Adjacent LED is lit when on.

1.1.1. Power Indicator

- ☐ GREEN..... ON/SELFTEST
- ☐ ORANGE..... STANDBY
- ☐ ORANGE..... SUSPEND
- ☐ ORANGE..... OFF

1.1.2. On Screen Display (OSD) Opertion

☐ OSD Icon Menu

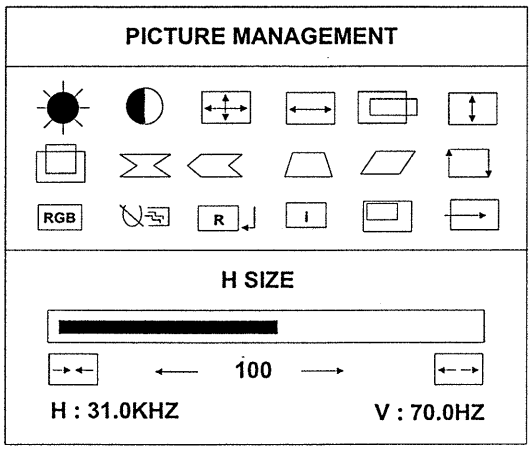

☐ OSD Actions

When a user needs to alter the current monitor parameter for any reason, the user can press the "Menu/Exit" key on the user interface located on the front bezel. There is a OSD icon memu will appear on the screen, which includes totally *18 function icons. We separate those *18 function icons into six categories for easy explanation as the following paragraph.

The six categories are (A) Brightness/Contrast (B) Size/Position: Zoom, Horizontal size position, Vertical size position (C) Geometry: Pincushion, Pin-Balance, Trapezoid, Parallelogram, Tilt. (D) Color Management: 9300, 6500, 5000, User Setting (E) Degauss, Moire, Convergence (F) Recall, Information, OSD, Video input.

For the H/V Size/Position, Geometry and Contrast/Brightness category, the lower half will show the H/V frequency for the display mode and a bar gauge indicates the increase and decrease of the parameter adjustment range. As the other categories are selected, it will show options of sub-functions.

AS the OSD icon menu shows onto the display, user can use adjustment button to select the function icon. Once the specific icon is selected, user needs to depress the "Enter" button to confirm the selection, then use adjustment button again to adjust the setting.

The monitor will save the change automatically into a user mode and become the default setting.

☐ Brightness/Contrast Adjustment Category

At normal operation, user can adjust contrast by using adjustment button directly without entering OSD operation. A small OSD pattern will show the setting.

☐ Zoom, Horizontal/Vertical Size/Position Adjustment Category

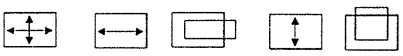

there are five function icons for this category, i.e. Zoom, H-Size, H-Position, V-Size, V-Position.

☐ Geometry Adjustment Category

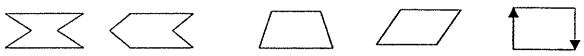

There are Pincushion, Pin-Balance, Trapezoid, Parallelogram and Tilt adjustment for user to change the geometry related setting.

☐ Color Management Adjustment Category

There are three factory preset and one user setting color temperature modes. The user can select one of the color modes (i.e., 9300, 6500, 5000), and press "Enter" button to display the factory setting and if required, enter "user" mode to change the setting of R, G, B color to adjust back to former stage, depress exit key.

☐ Degauss/Moire/Convergence Adjustment Category

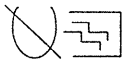

There are four sub-functions of degaussing, moire reduction, horizontal convergence, veretical convergence to be choosen.

Select degauss icon and depress enter to implenemt CRT degaussing.

Enter moire icon and adjust to reduce moire phenomenon on display picture.

Convergence function is for adjusting misconvergence of R, G, B color in horizontal or vertical direction.

☐ Recall/Information/OSD/Video Input Adjustment Category

There are three modes to select the recall setting through OSD function menu to select recall icon. One is mode recall for recall factory preset geometry related setting, second is for all recall including mode recall function and color temperature 9300 and brightness cut off and contrast mode, and third is for cancellation before recall execution.

Information icon is for user to check the scanning frequencies of current display mode.

OSD position is for adjusting the user's preferable position and select OSD time out function in 9 seconds to 255 seconds.

Video input icon is for signal input selection of BNC or D-sub mode. This functionis is for dual input model.

- Exit

The exit key can exit current stage to former stage or exit OSD function. In case, there is no any input signal from the user interface on the front bezel within 20 seconds, the OSD icon menu will disappear automatically.

1.2. Product Overview

The monitor installed in the OP-V95/OP-V95-Euro described in this service manual has the following features:

- 19 inches 0.26mm dot pitch conventional C.R.T
- 30~95kHz horizontal scanning
- 50~150Hz vertical refresh rate scanning
- 28 total memory modes in standard configuration
- Universal segmented auto range Power Supply
- VESA/NUTEK/EPA compliant power management

1.3. CRT Characteristics

- Screen Size ..... 19 inches
- Faceplate Type ..... FST
- Phosphor Dot Pitch ..... 0.26mm pitch, black matrix
- Electron Gun ..... In-Line high resolution gun
- Deflection Angle ..... 90 degree diagonal
- Shadow Mask ..... Invar
- Phosphor Type..... P22
- Phosphor Persistence..... Medium Short
- Standard Light Transmission 46%

1.4. Power Specifications

1.4.1. Power Supply

- A/C Receptacle IEC320
- Power Supply Type..... Universal
- A/C Line Voltage Ranges ... 88VAC-132VAC
  180VAC-264VAC
- A/C Line Frequency Ranges . 50Hz/60Hz±3Hz
- Inrush Current ..... 30A/132V or
  50A/264V (at cold start)
- Leakage Current ..... ≤3.5mA
- Degauss ..... Automatic and Manual
  (20 minutes for a full recovery)

1.4.2. Power Management

- Summary of operating states:

APM State	LED Color	Power Consumption	Automatic Recovery Time
On	Green	< 150W	Not applicable
Standby	Orange	< 30W	<3 seconds
Sus-pend	Orange	< 8W	<10 seconds
Off	Orange	< 8W	<10 seconds

- Signaling compliant with VESA DPMS guidelines
- Nutek 1992 guidelines ..... Suspend < 30 watts,
  off < 8 watts
- EPA Energy Star..... Standby < 30 watts

1.5. Video Specifications

1.5.1. Video Amplifier Performance

- Bandwidth (dot rate)..... 135MHz
- Video generator rise / fall times.....2ns maximum
- Scope and probe bandwidth .. 350MHz minimum
- Probe capacitance 2.5pf
- Overshoot / Undershoot ..... 10% maximum
- Sync on green

1.5.2. Video Input Signal Characteristics

- Video Type ..... Analog
- Amplitude ..... 700mV maximum
- Video Input Impedance..... 75 Ohms±1%
- Optional DDC 1/2B video Connector Pin Assignments:

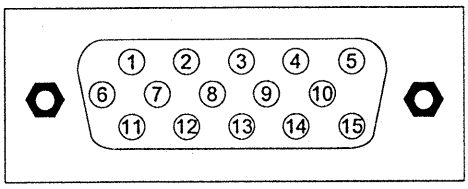

pin	Signal	pin	Signal	pin	Signal
1	Red video	6	Red return	11	Monitor GND
2	Green video	7	Green return	12	SDA
3	Blue video	8	Blue return	13	H. sync
4	Monitor GND	9	No pin	14	V.sync(VCLK)
5	No pin	10	Sync return	15	SCL

1.6. Sync Input Signal Characteristics

1.6.1. Separate Sync

- Sync Type ..... TTL
- Amplitude ..... 2.4V minimum
  (Logic High), 0.8V max.(Logic Low)

- ☐ Polarity ..... Positive or Negative
- ☐ Equalization pulses..... Not allowed

1.6.2. Composite Sync

- ☐ Sync Type..... TTL
- ☐ Amplitude..... 2.4V minimum(Logic High)
  0.8V max.(Logic Low)
- ☐ Polarity ..... Positive or Negative
- ☐ Serration pulses ..... Allowed at horizontal rate
- ☐ Equalization pulses..... Not allowed

1.6.3. Sync On Green

- ☐ sync Type ..... As per Apple
- ☐ Amplitude..... 0V minimum (Logic High)
  -286mV max.(Logic Low)
- ☐ Polarity ..... Negative/composite
- ☐ Serration pulses ..... Allowed at horizontal rate
- ☐ Equalization pulses..... Not allowed

1.7. Environmental

1.7.1. Temperature/Humidity/Altitude

OPERATING :

- ☐ Temperature ..... 10°C to 40°C
- ☐ Relative Humidity ... 0 to 90%,non-condensation
- ☐ Altitude..... 0 to 10,000 feet

Note: The display will operate within 10°C to 40°C in all modes but may not meet all the visual performance criterion listed in spec section 7.0 at temperature extremes.

NON-OPERATING :

- ☐ Temperature ..... -40°C to +65°C
- ☐ Relative Humidity ... 0 to 95%,non-condensation
- ☐ Altitude..... 0 to 40,000 feet

1.7.2. Vibration Test

UNPACKED UNIT :

Operating Without Package

	Frequency	Amplitude	Acceleration(G)
1	5-22Hz	0.25mm	-
2	22-500Hz	-	0.25G

Times/Cycle:

- ☐ Rise Time ..... 10 Minutes
- ☐ Fall Time ..... 10 Minutes
- ☐ Number of Sweeps..... 1 Cycle
- ☐ Axis..... X,Y,Z
- ☐ Total Times..... 60 Minutes

PACKAGED UNIT :

- ☐ Storage With Package
- ☐ Step:

	Frequency	Amplitude	Acceleration(G)
1	5-50Hz	-	0.83G
2	-	-	-

Times/Cycle:

- ☐ Rise Time..... 10 Minutes
- ☐ Fall Time ..... 10 Minutes
- ☐ Number of Sweeps..... 1 Cycle
- ☐ Axis ..... X,Y,Z
- ☐ Total Times ..... 60 Minutes

1.7.3. Drop Test

- ☐ Compliant with NSTA Project 1A guidelines
- ☐ Drop Height..... 46cm
- ☐ Test Direction..... 1 Corner, 3 Edges, 6 Faces

1.8. Preset Timing Modes

This display has 10 preset display modes configured during manufacture, given in the following table:

Mode No.	Hf kHz	Vf Hz	Dot x Line
01	31.469	70.087	640x400
02	37.500	75.000	640x480
03	46.875	75.000	800x600
04	60.023	75.029	1024x768
05	68.667	84.997	1024x768
06	79.976	75.025	1280x1024
07	91.146	85.024	1280x1024
08	93.750	85.000	1600x1200
09	49.725	74.550	832x624
10	68.680	75.060	1152x870

Notes

Section 2.

Disassembly Instructions

2.1. Remove the Rear Cover 2-1
2.2. Remove the Shield 2-1
2.3. Remove the Neck Board 2-1
2.4. Remove the Main Board 2-2
2.5. Remove the Control Board 2-2

Confidential - Do Not Copy

2.1. Remove the Rear Cover

1. Remove the four screws at the rear of the display. Refer to the figure 2-1 (A).
2. Remove the rear cover.

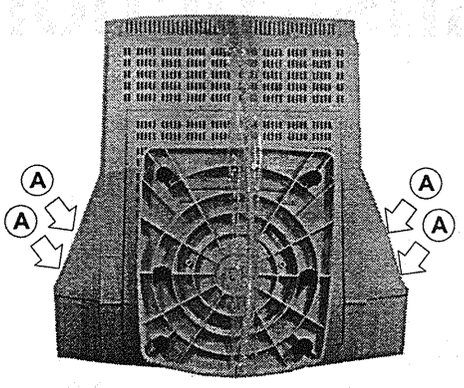

Figure 2-1 Remove the Rear Cover

2.2. Remove the Shield

1. Disconnect the ground wire from the shield. Refer to the figure 2-2 (A).
2. Remove the two screws from the shield. Refer to the figure 2-2 (B).
3. Disconnect the three ground wires from the shield. Refer to the figure 2-3 (A).
4. Remove the two screws from the shield. Refer to the figure 2-3 (B).
5. Remove the shield.

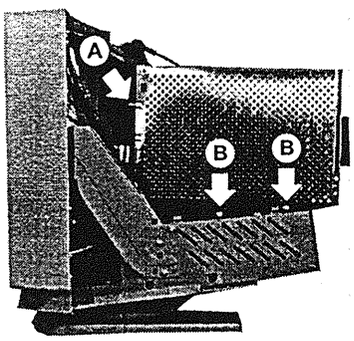

Figure 2-2 Remove the Shield (right side)

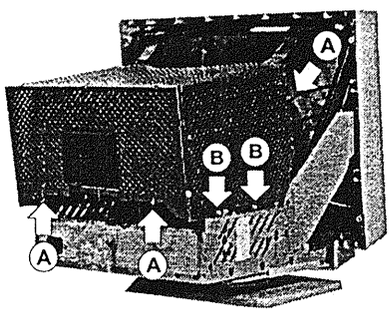

Figure 2-3 Remove the Shield (light side)

2.3. Remove the Neck Board

The neck board is plugged on to the CRT neck and is enclosed in a metal shielding.

1. Disconnect the ground wire from the neck shield. Refer to the figure 2-4 (A).
2. Release the cord cramp from the FBT cover. Refer to the figure 2-4 (B).
3. Remove the two connected pins from the main board. Refer to the figure 2-4 (C).
4. Disconnect the ground wire from the neck shield. Refer to the figure 2-5 (A).
5. Release the cord cramper from the FBT cover. Refer to the figure 2-5 (B).
6. Remove the two connected pins from the main board. Refer to the figure 2-5 (C).

IMPORTANT NOTE

To avoid risk of electric shock, before removing the anode cap, made sure tdhe anode has been completely discharged as high voltage may remain on the anode for extended time after power off.

7. Remove the anode cap from the CRT. Refer to the figure 2-5 (D).
8. Remove the neck shield.
9. Remove neck board.

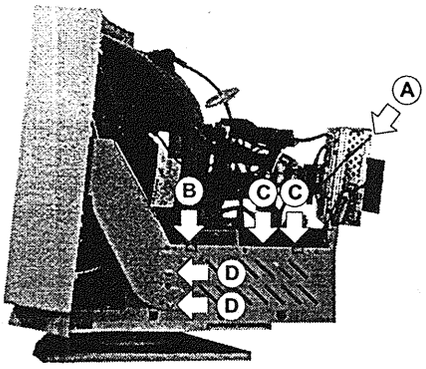

Figure 2-4 Remove the Neck Board (right side)

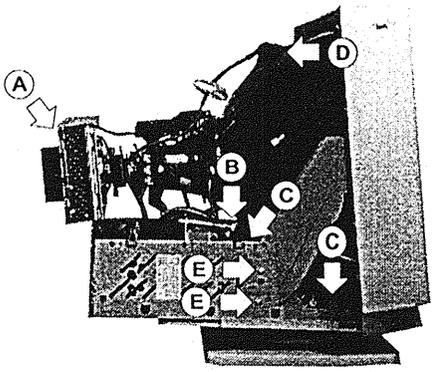

Figure 2-5 Remove the Neck Board (left side)

2.4. Remove the Main Board

1. Remove the two screws from the shield. Refer to the figure 2-4 (D).
2. Remove the two screws from the shield. Refer to the figure 2-5 (E).
3. The CRT display side downward.
4. Remove the four screws from the bottom. Refer to the figure 2-6 (A).
5. Remove main board.

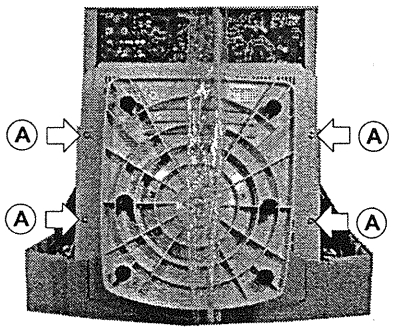

Figure 2-6 Remove the Main Board

2.5. Remove the Control Board

1. Remove the four screws from the control board. Refer to the figure 2-7 (A).
2. Remove the control board.

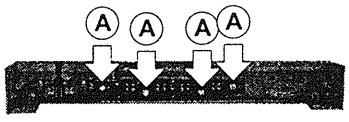

Figure 2-7 Remove the Control Board

Notes

Section 3.
Theory of Operation

3.1. Switching Power Supply 3-1
3.2. The Deflection Circuit 3-2
3.3. Video Amplifier 3-12
3.4. Microprocessor and Sync Processing. 3-13

3.1. Switching Power Supply

The switching power supply (SPS) used in this display is a 150W flyback mode type. The power supply provides six outputs (215V, 78V, 15V, -12V, 6.3V and +5V). Please refer to schematic diagram for details of the circuit layout. The input voltage is from 88VAC — 264VAC with an input frequency of 47Hz — 63Hz. as shown in figure 3-1.

The current first passes through the EMI control circuit and is regulated to DC by the bridge diode (BD901) and filter capacitor (C907). During rectification a large current surge is generated and as C907 has a very low impedance while being charged the fuse, on/off switch and bridge diode are all liable to be damaged. For this reason, a thermal resistor (NTCR) is added before the bridge diode in order to limit the large current surge generated during the charging of the capacitor.

During rectification, C910 is charged through R903 and R904. When C910 is charged to 16V, IC901 3842A starts to operate (for details, of the functions of this IC, please refer to the relevant data sheet) and outputs a pulse signal from Pin 6 to set the transistor Q902 in the ON state. At this time, transformer T903, which is connected in parallel, starts to store power. When the current passing through the resistor R914, and the supplementary current from R957 and R964 into Pin 3 of IC901 reaches 1.1V, IC901 is reset, causing the energy stored by the transformer to reach the rated value. In order to prevent the transformer from being saturated and causing damage to the transistor, when transistor Q902 is in the OFF state, the energy stored in the transformer T903 is released into the secondary coil and is regulated through the various output loops and filters and converted to the required DC output. In addition to this, at the appropriate time, the windings pin1 — pin2 supply Pin 7 of IC901 with a fixed power supply for normal operation. Also, when windings pin2 — pin3 are in power saving active state, power is supplied to Pin 7 of IC901 for normal operation.

In any of the above cased, the output pulse is terminated and the FET is turned off, causing the voltage on the output of the FET to rise rapidly, and the voltage across the winding of the primary to reverse in polarity, thus tending to reset the flux within the core. At this point, the diodes D915, D916, D918-D920, D925 and D926 on the secondary supply winding become forward biased and begin to conduct, thus transferring energy from primary to the secondary, and charging the secondary capacitors.

There is also secondary winding the primary side of the power supply which, through diode D908 and Q901 recharges the control IC901 reservoir capacitor C910. This supply then keep the IC901 running. In the event of a secondary short circuit, the supply fails to recharge, thus the voltage across C910 drops to a threshold limit below which the IC901 cuts out and returns to its low current load operation.

During normal operation, the supply rails charge until the error amplifier realized by IC903 on the secondary begins to turn on the opto-coupler, PH901. At this point, the photo-transistor of this opto-coupler on the primary side begins to conduct, draining current from the primary control IC901 supply through diode D907 and D928.

Under normal operation IC903 regulates the current flow through PH901, and hence determines the output voltage of the error amplifier internal to IC901. Various passive components around IC903 and IC901 set the gain compensation for optimum stability and regulation characteristics.

In the event of a fault condition occurring, either Q904 may be turned on by the lack of voltage at pin2 of IC901 or zener diode ZD903 may conduct, due to excessive voltage on the primary IC901 supply. In the latter case, the triac Q903 will fire, thus dragging down the output of the control IC901 error amplifier, which in turn will limit the duty cycle and reduce the output voltage. It will stay in this mode until the AC input power is removed.

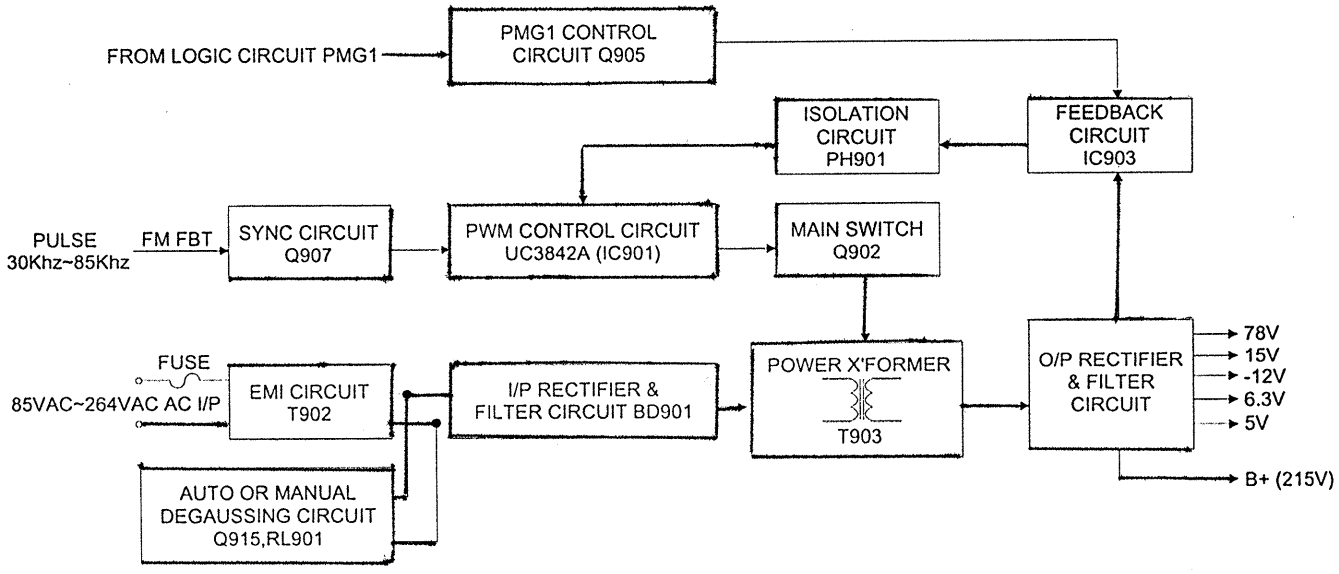

Figure 3-1 Switching Power Supply Block Diagram

When the feedback signal passing through the main 78V output is completed, the transistor's duty cycle is adjusted through the transfer to Pin 2 of IC901 3842A of the primary coil by PH901 4N35 and IC903 TL431, stabilizing the output current. At this time, it is important to note that before the feedback signal is established, the charge level of C917 cannot trigger Q903 SCR or it will cause a faulty power startup. In addition, in order to synchronize the supply power and monitor and reduce noise that will cause interference to the display, in the area D913 the monitor's feedback transformer gets a feedback signal in order to ensure synchronization between the power supply and monitor, with synchronization in the range 30kHz — 85kHz. Because the power operating frequency changes with the monitor causing changes in the value of IP, (the value of LP is fixed while the value of IP increase or decreases according to the frequency), this affects the test value of Pin 3 of IC901 3842A. This causes the total power supplied to vary according to the frequency, so a compensation value is provided by D914 in order to reduce the difference in total power for different frequencies. In addition, because the AC input ranges from 85VAC to 264VAC, this causes the value of the direct current on the DC bus to vary, affecting the rise rate of IP, the oscillator and the duty cycle, and causing the test value obtained at Pin 3 of IC901 to vary. To resolve this, a compensation value is provided by R964 and R957 which reduces the difference resulting from the different input voltages.

3.1.1. Auto-degaussing

When base of Q915 connector is in high state, the transistor Q915 2SC945P is on, causing the relay to jump from Normal Open (N.O.) to Normal Close (N. C.) to perform auto-degaussing operations. The duration of this operation is controlled by a logic pulse and lasts approximately 6 (six) seconds. When transistor Q915 enters the OFF state and the relay returns to N.O. to terminate the auto-degaussing operation is completed.

3.1.2. Suspend Mode Operation

Two feedback ratios can be selected, both sensing from the 78V rail. In the event of Q905 being turned on by micro processor, additional current is drawn from the virtual earth node of IC903, thus causing the power supply to serve the rail to a high voltage, nominally 78V. This is trimmed by resistor R937, R940 and R941. The other supply rail are predetermined ratios of this winging, being +15V, -12V, 6.3V and 215V nominally. In addition, a low voltage primary side winding feeds the control IC901 directly through D907 turning off the control IC901 supply through Q901, which would otherwise dissipate excessively.

When Q905 is turned off, the 78V rail drop to around 17V. In this case, the primary control supply fed through D907 drops to a value that is below the level needed to sustain operation. Instead, Q901 begins to conduct and the higher voltage supply winding taken via D908 is used to keep the primary side powered up with minimal power losses.

The 5V power supply is driven by one of two sources. In normal operation when the 78V is present, the 5V regulator, IC902 is fed from the 15V rail through diode D921. When switched to standby mode (78V rail drops to 12V) then the 15V rail drops too low to supply IC902. In this case Q906 take over and maintains the supply to IC902 at around 9V.

In addition to the 5V regulated supply, in normal operation there is also a 15V regulated supply take from the 15V rail.

To ensure that micro processor gets a good 5V power supply, there is a power good detection circuit formed by Q801 and Q802. This monitors the supply going into the 5V rail (not the 5V rail directly). It detects whether there is sufficient voltage to enable the 5V regulator to work effectively. It is not a detection of the 5V rail itself, but relies upon the premise that the regulator is not faulty and that there is no faulty load condition on the 5V.

During power up, there is a delay to the signal at the output of the threshold comparator Q801 and Q802 a caused by ZD801 and C801, in order to allow the micro circuit time to stabilize. The threshold is chosen such that the RESET line drops low at least 25ms before the 5V drop out of regulation.

Finally a synchronization pulse taken from the horizontal output stage maintains the SMPS operating frequency in sync with the horizontal scan. D913 injects a pulse which prematurely triggers the oscillator within IC901 which would otherwise run at a frequency lower than the minimum required sync frequency.

3.2. The Deflection Circuit

Please refer to the block diagram of the deflection circuit and video circuit and Logic circuit as shown in figure 3-2.

3.2.1. IC301 LM1292 Video PLL System for Continuous-Sync

The LM1292 is an integrated horizontal time base solution specifically designed to operate in continuous-sync video monitors. It automatically synchronizes to any H ferquency from 30kHz to 85kHz and provides the drive pulse to the high power deflection circuit.

Available sync processing includes a vertical sync separator and a composite video sync stripper. An internal sync selection scheme gives highest priority to separate H and V sync, then composite sync, and finally sync on video, no external switching between sync sources is necessary is necessary. The LM1292 provides polarity-normalized H/HV and V sync outputs, along with logic flags which show the respective input polarities.

The design uses an on-chip FVC (Frequency to Voltage Converter) to set the center frequency of the VCO

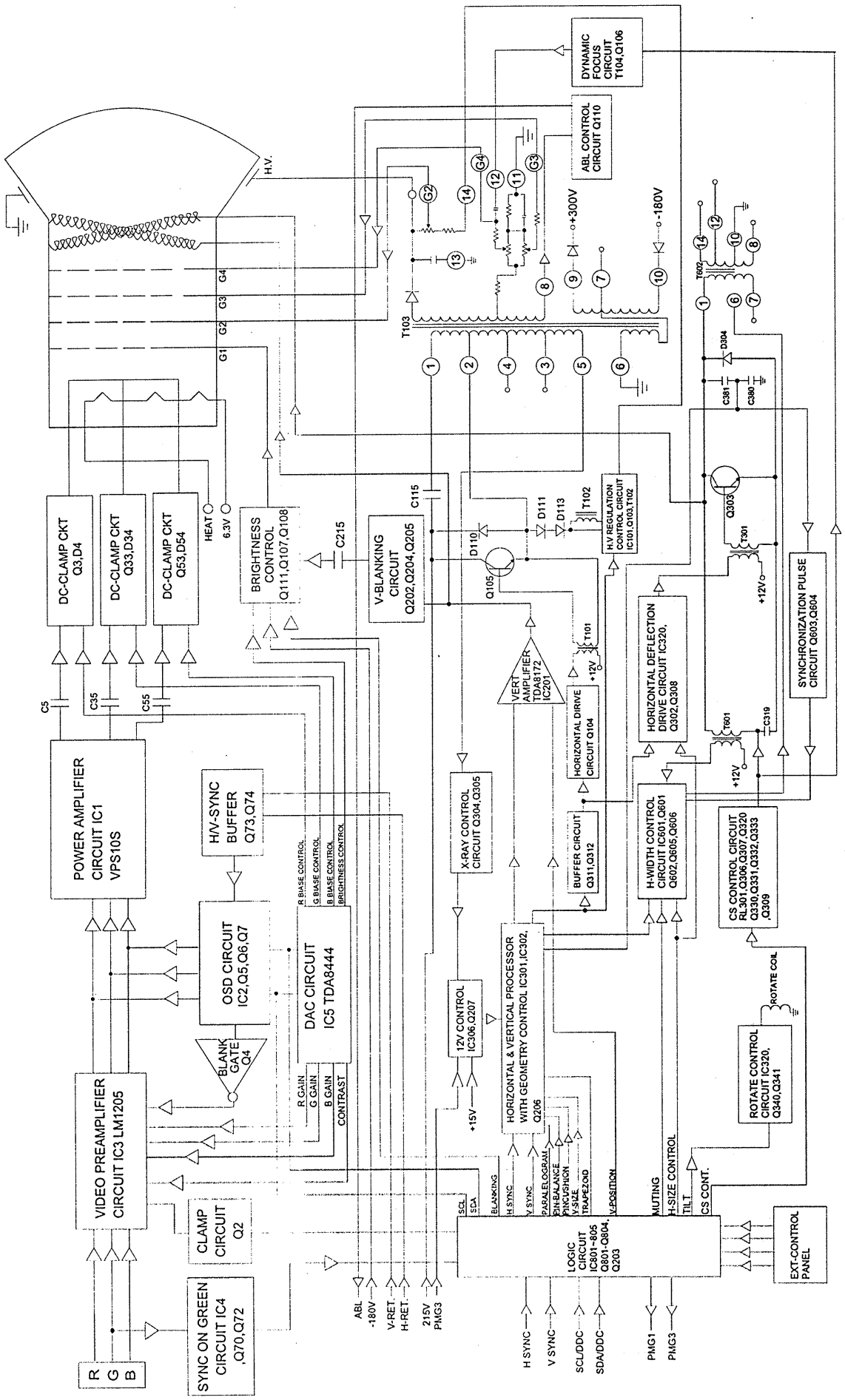

Figure 3-2 Video,Logic,Audio and Deflection Block Diagram

(Voltage Controlled Oscillator). This technique allows autosync operation over the entire frequency range using just one optimized set of external components.

The system includes a second phase detector which compensates for storage time variation in the horizontal output transistor, the picture's horizontal position is thus independent of temperature and component variance.

The LM1292 provides DC control pins for H drive duty cycle and flyback phase.

3.2.2. IC301 LM1292 Pin Descriptions

Pin 1 FVC CAP 2:
Secondary FVC filter pin. Cfvc2 is connected from this pin to ground. The width of the VIDEO MUTE (pin 4) pulse is controlled by the time constant difference between the filters at pins 1 and 25.

Pin 2 Clamp Control:
This low impedance current mode input pin is internally biased to 2V. The direction of current sets the pulse position, while the current magnitude sets the pulse width. A voltage below 2V positions the pulse on the back porch of the horizontal sync pulse and decreasing voltage narrows the pulse. A voltage above 2V sets the pulse on the horizontal sync-tip and increasing voltage narrows the pulse. At the boundary of the switchover between the two modes, there is a narrow region of uncertainty resulting in oscillation, which should be on problem in most applications. When there is no H-sync in sync-tip mode, the clamp pulse is generated by the VCO at the frequence preset by pin 6. This feature is intended for use in on screen display system.

Pin 3 Clamp pulse:
Active-low clamp pulse output.

Pin 4 Video Mute:

This open-collector output produces an active-low pulse when triggered by a step change of H-sync frequency.

Pin 5 F-Max:
A resistor from this pin to ground sets the upper frequency limit of the VCO.

Pin 6 F-Min:
A resistor from this pin to ground sets the lower frequency limit of the VCO.

Pin 7 VCC:
12V nominal power supply pin. This pin should be decoupled to pin 21 (GND) via a short path with a cap (C302) of at least 1000μf.

Pin 8 Vertical Sync In:
This pin accepts AC-coupled vertical sync of either polarity.

Pin 9 Composite Video In:
The composite video sync stripper is active only when no signal is present at pin 12 (H/HV In). The signal to pin 9 must have negative going sync tips which are at least 0.14V below black level.

Pin 10 H/HV Sync Out:
The sync processor outputs active-low H/HV sync derived from the active sync input (pin 9 or pin 12). Pin 10 stays low in the absence of sync input.

Pin 11 H/HV Cap:
A capacitor is connected from this pin to ground for detecting the polarity and existence of H/HV sync at pin 12.

Pin 12 H/HV Sync In:
This pin accepts AC-coupled H or composite sync of either polarity.

Pin 13 H Drive Duty Control:
A DC voltage applied to this pin sets the duty cycle of the horizontal drive output (pin 19) . With a range of approximately 30%~70%. 2V sets the duty cycle to 50%.

Pin 14 H Drive EN:
A low logic level input enables H-Drive out (pin 19).

Pin 15 X-ray Shut Down:
This pin is for monitoring CRT anode voltage. If the input voltage exceeds an internal threshold. H-Drive out (pin 19) is latched high and video mute (pin 4) is latched low. Vcc has to be reduced to below approximately 2V to clear the latched condition, I.E power must be turned off.

Pin 16 Vertical Sync Out:
The sync processor outputs active-low vertical sync derived from the active sync input (pin 8, pin 9 or pin 12). Pin 16 stays low in the absence of sync input.

Pin 17 Vertical Cap:
A capacitor is connected from this pin to ground for detecting the polarity and existence of vertical sync at pin 8.

Pin 18 Flyback In:
Input pin for phase detecor 2. For best operation, the flyback peak should be at least 5V but not greater than Vcc. Any pulse width greater than 1.5μs is acceptable.

Pin 19 Horizontal Drive Out:
This is an open-collector output which provides the drive pulse for the high power deflection circuit. The pulse duty cycle is controlled by pin 13.

Pin 20 Horizontal Drive Ground:
Ground return for horizontal drive out. For best jitter performance, this pin should be kept separate from the system ground (pin 21), the respective ground traces should be met at a single point, located as close as possible to the power supply output.

Pin 21 Ground:
System ground. For best jitter performance, all LM1292 filter components and bypass capacitors should be connected to this pin via short paths.

Pin 22 Voltage Refer Cap:
This is the decoupling pin for the internal 8.2V reference. It should be decoupled to pin 26 (RETURN) via a short path with a cap (C301) of at least 470μf.

Pin 23 Phase Detector 2 CAP:
The low-pass filter cap for the output of phase detector 2 is connected from this pin to pin 26 (RETURN) via a short path.

Pin 24 Horizontal Drive Phase:
A DC control voltage applied to this pin sets the phase of the flyback pulse with respect to the leading edge of horizontal sync.

Pin 25 FVC CAP 1:
Primary FVC filter pin. Cfvc 1 is connected from this pin to pin 21 (GND) or pin 26 (RETURN) via a short path. The voltage at this pin is buffered to pin 27 (FVC out).

Pin 26 RETURN:
Ground return for the decoupling capacitor at pin 22 (Vref CAP) , the filter capacitor at pin 23 (Phase Det 2 CAP) as well as the loop filter at pin 28 (PD1 OUT/VCO IN). This pin must be isolated from GND and H-drive GND.

Pin 27 FVC Out:
Buffered output of the frequency-to-voltage converter, which sets the VCO center frequency through an external resistor to pin 28. Care should be taken when further loading this pin, since during the vertical interval it presents a high output impedance. Excessive loading can cause top-of-screen phase recovery problems.

Pin 28 PD 1 Out/VCO In:
Phase detector 1 has a gated charge pump output which requires an external low-pass filter. For best jitter performance, the filter should be ground to pin 26 (RETURN) via a short path. If a voltage source is applied to this pin, the phase detector is disabled and the VCO can be contorlled directly.

3.2.3. IC302 LM1295 DC Controlled Geometry Correction System

The LM1295 is specifically designed for use in a continuous sync monitor. The injection-locked vertical oscillator operates from 50 Hz to 170 Hz, covering all known video monitors. A differential ouptut current is provided in order to prevent ground interaction.

The IC302 provides two outputs composed of the summation of DC controlled 1st and 2nd order ouptut terms. The first ouptut corrects for EW pincushion and trapezoid. The second corrects for parallelogram and bow.

A DC controlled output is provided for vertical dynamic focus correction.

3.2.4. IC302 LM1295 Pin Descriptions

Pin 1 Ground:
This pin should be connected to the power ground at pin 17.

Pin 2 Vertical Height:
A Voltage between 0V and 4V on this pin controls the amplitude of the +V and -V drive currents, with increasing voltage giving increasing current. The control range is approximately 1.8 to 1. The response time is low, being limited by the automatic level control loop.

Pin 3 4V CAP:
A C202 capacitor aluminum electrolytic or tantalum, should be connected between pin 3 and GND to bypass the internal 4V reference.

Pin 4 Vertical Sync In:
The vertical sync input takes a negative-going TTL level pulse which injection locks the vertical oscillator to the vertical sync frequency if it is above the LM1295 minimum frequency. The minimum pulse width is approximately 200µs. For free-running detection (no vertical sync in), this input should be at logic high.

Pin 5 8V CAP:
A C203 capacitor, aluminum electrolytic or tantalum, should be connected between pin 5 and GND (pin 17) to bypass the internal 8V reference.

Pin 6 Vertical Dynamic Heigh:
A voltage between 3V and 4V on this pin controls the amplitude of the +V and -V drive currents with increasing voltage giving increasing current. The control range is approximately 1.3 to 1.

Pin 7 Vcc:
Vcc should be bypassed to GND (pin 17) with a C216 aluminum electrolytic or tantalum capacitor. The supply voltage is 12V.

Pin 8 Voltage Reference CAP:
A C217 capacitor aluminum electrolytic or tantalum, should be connected between pin 8 and GND (pin 17).

Pin 9 Horizontal Dynamic width:
This output consists of the sum of the vertical ramp and the parabola derived from the ramp. The amplitude and polarity of the ramp signal is DC controlled by horizontal trapezoid control (pin 11) and of the parabola by E-W pin control (pin 10). The weighting of lthe ramp is 1/3 the parabola; i.e, with the horizontal trapezoid and E-W pincushion controls at 4V, the output is 3 parts parabola and 1 part ramp. Horizontal dynamic width is used to correct for trapezoid and east-west pincushion distortion.

Pin 10 E-W Pincushion Control:
A voltage of 0V to 4V adjusts the polarity and the amount of parabola in the horizontal dynamic width (pin 9) output. At approximately 2V, the amount is zero. From 2V to 4V, the amplitude increases and the parabola is positive-going. From 2V to 0V, the amplitude increases and the parabola is negative-going.

Pin 11 Horizontal Trapezoid Control:
A voltage of 0V to 4V adjusts the polarity and the amount of vertical ramp in the horizontal dynamic width (pin 9) output. At approximately 2V, the amount is zero. From 2V to 4V, the amplitude increases and the ramp is positive-going. From 2V to 0V, the amplitude increases and the ramp is negative-going.

Pin 12 Horizontal parallelogram control:
A voltage of 0V to 4V adjusts the polarity and the

amount of vertical ramp in the horizontal dynamic center (pin 14) output. At approximately 2V, the amount is zero. From 2V to 4V, the amplitude increases and the ramp is positive-going. From 2V to 0V, the amplitude increases and the ramp is negative-going.

Pin 13 Horizontal Bow Control:
A voltage of 0V to 4V adjusts the polarity and the amount of parabola in the horizontal dynamic center (pin 14) output. At approximately 2V, the amount is zero. From 2V to 4V, the amplitude increases and the parabola is positive-going. From 2V to 0V, the amplitude increases and the parabola is negative-going.

Pin 14 Horizontal Dynamic Center:
This output consists of the sum of the vertical ramp and the parabola derived from the ramp. The amplitude and polarity of the ramp signal is DC controlled by horizontal parallelogram control (pin 12) and of the parabola by horizontal bow control (pin 13). The difference between this output and the horizontal dynamic width output is in the weighting of the ramp, which is equal to the parabola; i.e with the horizontal parallelogram and horizontal bow controls at 4V, the output is 1 part parabola and 1 part ramp. Horizontal dynamic center is used to correct for parallelogram and bow distortion.

Pin 15 Vertical Dynamic Focus Control:
A voltage of 0V to 4V adjusts the polarity and the amount of parabola in the vertical dynamic focus (pin 16) output. At approximately 2V, the amount is zero. From 2V to 4V , the amplitude increases and the parabola is positive-going. From 2V to 0V, the amplitue increases and the parabola is negative-going..

Pin 16 Vertical Dynamic Focus:
This output consists of the parabola derived from the vertical ramp. The amplitude and polarity are controlled by vertical dynamic focus control.

Pin 17 Ground:
This is the power supply ground for the 12V supply and the point to which the bypass capacitors are returned.

Pin 18 Automatic Level Control CAP:
This capacitor (C204) is part of the level control circuit that maintains constant vertical height in spite of vertical sync frequency changes. If the VCO capacitor value is changed, the capacitor value should change in the same ratio. A R204 resistor should be connected from this pin to ground.

Pin 19 Double Frequency Capacitor:
This capacitor (C218) prevents the vertical oscillator from locking at twice the vertical sync frequrncy. If the VCO capacitor volue is changed, this capacitor value should change in the same ratio.

Pin 20 Oscillator Capacitor:
This is the vertical oscillator capacitor (C232). The value can be changed to change the minimum frequency.

Pin 21 Vertical Resistor:
One end of the vertical resistor connects to this pin. This resistor determines the gain of the vertical ramp current generator. The gain is inversely proportional to the resistance.

Pin 22 Vertical Resistor:
The other end of the vertical resistor connects to this pin.

Pin 23 Vertical Drive:
This is the negative-going vertical ramp output current of the differential pair. The ramp current waveform is superimposed on a direct current of approximately 315μA. The waveform amplitude is determined by the vertical height (pin 2) control voltage and the vertical dynamic (pin 6) control voltage. The current can be converted into voltage by a R236 resistor to ground or by a differential amplifier using the differential currents as inputs. The voltage compliance of the output is typically 6V.

Pin 24 + Vertical Drive:
This is the same as vertical drive except it is the positive-going output current of the differential pair.

3.2.5. Vertical Deflection Circuit

1. IC201 TDA8172 consists of a flyback generator, voltage stabilizer, drive circuit and vertical output amplifier.

2. **The vertical oscillator circuit**

   (a) The frequency and phase of the vertical oscillator circuit is generated by the vertical synchronization signal.

   (b) The synchronization signal is input from Pin 4 of IC302 LM1295, and after being processed by the synchronization circuit, is sent to the vertical synchronization oscillator circuit to trigger the vertical oscillator and synchronize the oscillator frequency with the external synchronization signal. The frequency of its internal free oscillation is set by the time constant of C232. It does not need an external F/V control because this IC302 can keep vertical synchronization. Pin 18 provides vertical A.L.C function. So the pin 18 of IC302 is use to maintain the difference between the free oscillation frequency and external synchonization signal frequency at a similar level and make the sawtooth wave amplitude from pin 24 of IC302 the same.

3. **Vertical Size Control**

   The pulse voltage output by the oscillator is sent to the sawtooth wave generator. The size and amplitude of the voltage of the sawtooth wave generation can be changed by DC value which output from Pin 35 of IC801 (PWM) and the vertical size can thus be controlled. This sawtooth wave voltage passes through a buffer and is output from Pin 24 of IC302 to pin 1 of IC201 TDA8172 of the vertical drive circuit.

   The vertical ramp and DC offset are also controlled by PWM output. The vertical ramp gen-

erated across C232 is buffered internally to IC302 by DC controlled variable gain stage. The voltage level is derived from pin 35 of IC801 (PWM) through the R210, R206 and C206 of grneration, then into pin 2 of IC302.

4. **Vertical Drive Circuit**

(a) It is not sufficient to rely solely on the oscillator circuit output to ensure the stability of the vertical output, so a first or second level amplifier circuit must be inserted between the oscillator circuit and the output. This circuit is called the drive amplifier and in addition to amplifying the sawtooth wave also corrects the vertical linearity.

After adding the drive circuit, because the level of amplification can be considerable, enough negative feedback can be added to correct vertical linearity and increase the stability of the circuit.

(b) If the current of the sawtooth wave flowing through the deflection yoke is distorted, then the top and bottom portions of the display will be expanded or compressed, resulting in poor linearity. In order to solve this problem, correction of the linearity of the sawtooth wave can be carried out before the drive level.

5. **IC201 TDA8172 Vertical Drive Circuit**

The IC201 uses a double power source, so it can be viewed as an OCL drive amplification circuit.

In order that the DC coupled output stage accurate DC reference, a DC reference voltage is taken from pin 5 of IC302. This used as the reference voltage (via divider resistors, R214) for the DC coupled power amplifier IC201. This is a simple voltage to current inverting amplifier, using R223 to derive a voltage proportional to the current in the deflection winding of the yoke. This voltage is fed back to the virtual signal earth inverting input of the power amplifier(pin1) by R219. This back to back diode feedback network modifies the linearity of the transfer characteristic in order to give precept "S" correction linearity, in addition to the variable correction in the ramp generator.

The vertical output amplifier has a voltage boost circuit to triple the positive supply voltage during retrace in order to speed up flyback. It does this by charging capacitor C210 through diode D202 during the normal forward scan. Pin6 of the IC201 is the voltage supply to the power output stage. When flyback occurs, pin3 is switched to the positive supply rail on pin2, thus adding the voltage across C210 to that of the supply rail, effective doubling the supply momentarily.

6. **Vertical Centering Adjustment**

Since IC201 functions as an OCL circuit, VDC is output from Pin 7 of IC201, so the central current can be changed to shift the on-screen display up or down to prevent voltage fluctuation. The DC operating point of the amplifier can be varied by the pin 38 of IC801 (vertical position) output and via R212, C207 and R213 to pin 7 of IC201 which adds or subtracts an offset into the output, thus varying the DC offset of the scan and hence the vertical centering.

3.2.6. Geometry Correction Circuit

1. If the width of the border in the center of the screen is insufficient, the waveform shown in Figure 3-3 below, can be used to add to horizontal deflection B+ in order to change the deflection of the horizontal deflection circuit. This waveform is the parabola obtained after regulation of the vertical period, and is created to perform amplitude modulation on the horizontal deflection current, as shown in Figure 3-4.

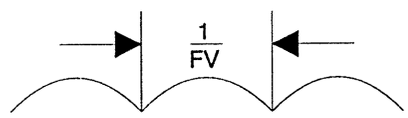

Figure 3-3 Voltage Correction Wave

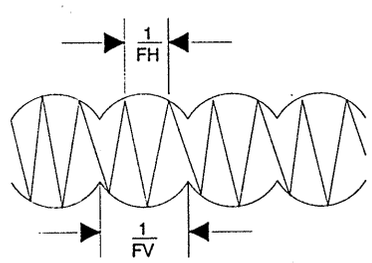

FH: Horizontal Frequency
FV: Vertical Frequency

Figure 3-4 Current Correction Wave

2. The sawtooth wave is output from Pin 9 of IC302 and through C350 and R364 and input to Pin 2 of IC601 (DC to DC circuit). It is then output from Pin 6 of IC601 and after being sent to T603's second coil output, is added to horizontal B+ to provide pincushion and trapezoid distortion correction. So, is created to preform amplitude modulation on the horizontal deflection output pluse, as shown in figure 3-5.

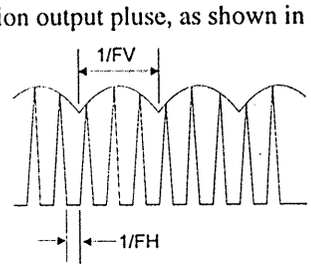

Figure 3-5 Collector of Q303 Output Pluse Correction Wave

3. The sawtooth wave is output from pin 14 of IC302 and through R353 and C314 and input to pin 24 of IC301. It is added to horizontal phase to provide parallelogram and bow distortion correction.

3.2.7. Structure of Horizontal Deflection Circuit

The function of the horizontal deflection circuit is to cause left/right scanning of the electron beam using the sawtooth wave current flowing through the horizontal deflection yoke, and is made up of the horizontal oscillator circuit, horizontal drive circuit, horizontal output circuit, synchronous AFC circuit and high voltage generator circuit.

1. **Horizontal Drive Amplifier**
In order to rapidly saturate the output transistor (ON) or cut it off (OFF), a sufficient basic current must be provided. Because of this, an amplifier circuit is added between the oscillator circuit and the output circuit to amplify the pulse voltage. At the same time, after the waveform has been regulated, by adding this circuit to the output circuit, this amplification circuit functions as a drive amplifier.

IC301 LM1292 consists of a vertical sync selection polarity circuit, composite video sync stripper circuit, AFC circuit, H/V sync and composite sync circuit, voltage control oscillator circuit, phase regulator circuit, X-Ray circuit, video mute circuit, voltage regulator circuit and horizontal drive duty cycle circuit. This IC includes the vertical and horizontal circuits combined in one package.

When the synchronization signal input to logic circuit and pin 12 of IC301. The pin 19 of IC301 output horizontal frequency is achieved by the pin 1 of IC801 and flyback pulse from between C380 and C381 fed to pin 18 of IC301. So, the pin 19 of IC301 output horizontal frequency through Q311, Q312, Q302, Q104 T101 and T301 provide a horizontal output transistor base current of Q303 and horizontal anode voltage generator output transistor base current of Q105.

The horizontal output transistor base drive is taken from a conventional base drive transformer stage. This circuit as in a similar manner to a flyback power supply. The square wave horizontal oscillator output signal is coupled into the base of emitter drive stage transistor Q302, Q104, T301, T101 across the +15V supplies. This causes the primary current to increase linearly until such time as Q302 and Q104 turns off, hence storing a predetermined amount of flux energy in the transformer. As Q302 or Q104 turns off, and the primary current falls to zero, the secondary voltage is driven above the threshold of the base-emitter junction voltage of the horizontal output transistor Q303 or Q105. Current flows through R320, R321, L301, L302 and D303 into the base of Q303 or through R116, R117, L101 and D130 into the base of Q105 hence turning this device on. The high base current of around 1.1A. Lamps is so high that Q303 or Q105 is driven heavily into saturation. This is important in order that the collector voltage should be as low as low as possible whilst conducting the high peak currents that flow through the horizontal deflection winding. In turn, this is vital to limit dissipation.

At the required time as determined by the horizontal oscillator, the base drive transistor is turned back on. The voltage at Q302 or Q104 collector fall rapidly back towards the ground rail. However, the secondary current still remains flowing in a positive direction for a short time, due to the finite leakage inductance of T301 or T101. Also, due to the heavy saturation of Q303 or Q105, the base voltage remains at around 1V. The current in the secondary winding rapidly reverses and goes sharply negative as the charge stored within the base region of Q303 or Q105 is removed. D303 or D130 helps to speed up this charge removal. Note that during this time, the collector output of the Q303 or Q105 is still turned on, even though the base current is flowing out of the base.

This period of time is known as the storage time of the device and may take between 2-3us, depending upon peak collector current and temperature and various other design factors. Finally, when all charge in the base region of Q303 or Q105 is dissipated the base current suddenly stops, and the secondary current drops almost instantly to zero. At that point, the device now become non conducting and the collector current flow also terminates. The secondary voltage on T301 or T101 drops to it's unloaded voltage and the current flow in the primary settles to it initial value once more.

2. **Horizontal Equivalent Output Circuit**
The horizontal output circuit uses the switch operation of a transistor and a damping diode, and provides a sawtooth wave current to the deflection yoke. The horizontal deflection yoke is made up of the L value on the coil and resistance r inside the coil connected in series. Its resistance is extremely small, and the time constant (L/r) is extremely large. Because of this the voltage at the two terminals of the coil cause rapid variation in the current flowing in the coil still will slowly vary, creating a sawtooth current. The basic circuit and equivalent circuit are shown in Figures 3-6 and 3-7.

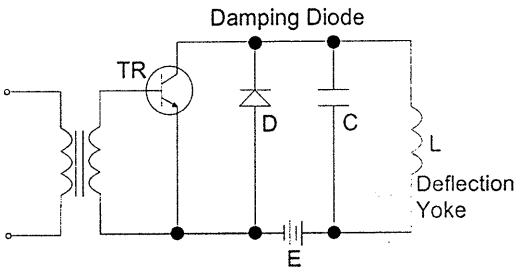

Figure 3-6 The Basic Deflection Circuit

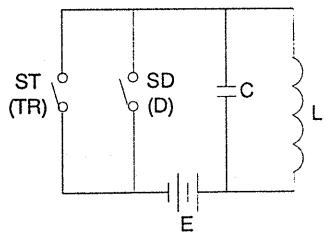

Figure 3-7 Equivalent Circuit

3. **Horizontal Output Equivalent Circuit Operation**

Refer to Figure 3-8 for the current wave of the voltage of the horizontal output circuit during operation.

(a) t1 — t2 Period

The base of the output transistor is added to the forward bias voltage. As the current through the base is very large, it will cause the output transistor to be saturated, corresponding to the ON state of S1 in the equivalent circuit. At this time the deflection yoke contains a current flow and because the time constant is large, the current will slowly show a linear increase as shown in Figures 3-8 (b) and 3-9 (a).

(b) t2-t3 Period

At t2, a negative load is applied to the to the base and the output transistor changes to OFF (S1 in open state). There is no current passing through the transistor at this time and the L and C components of the deflection yoke become

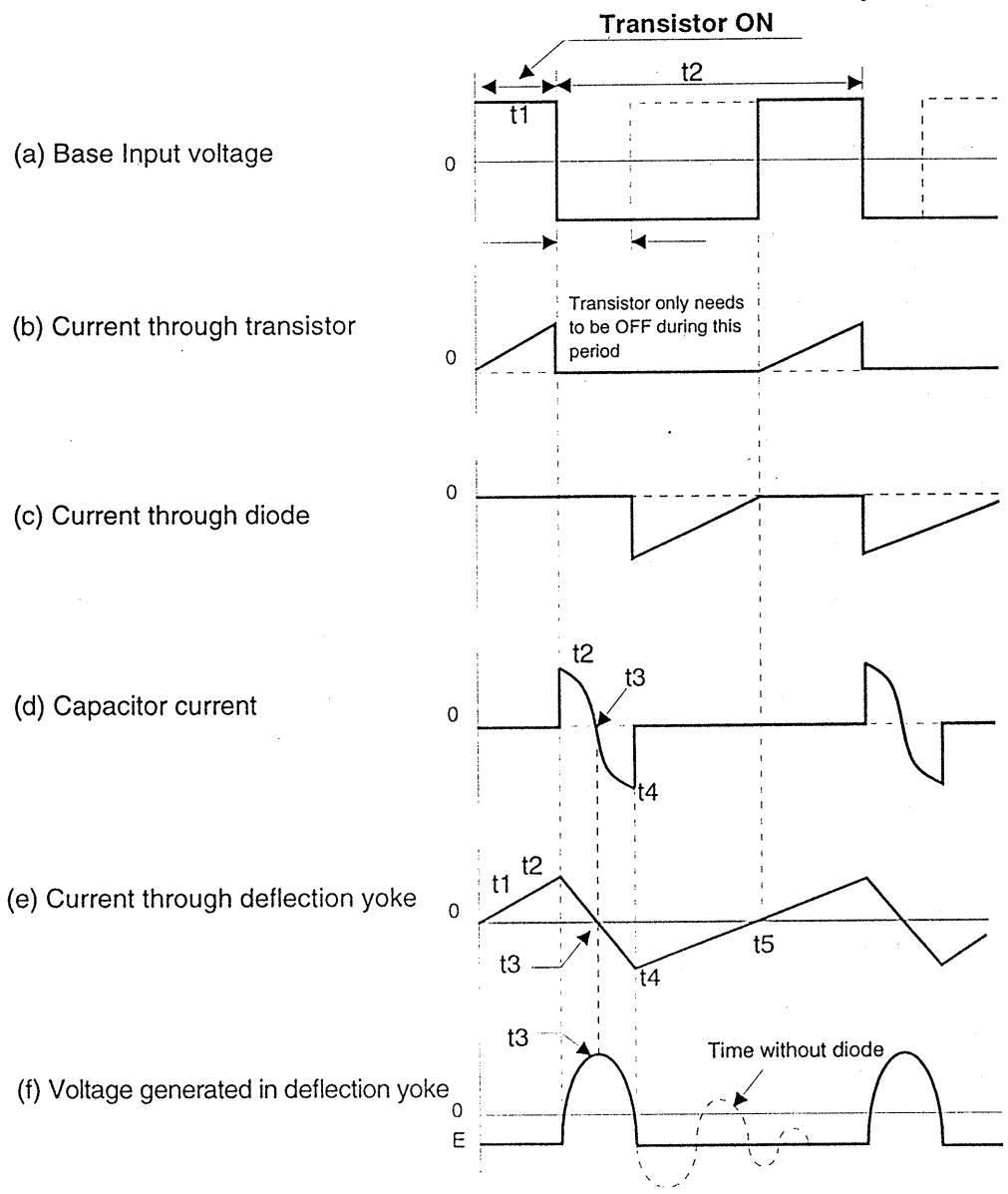

Figure 3-8 Horizontal Output Voltage/Current Waves

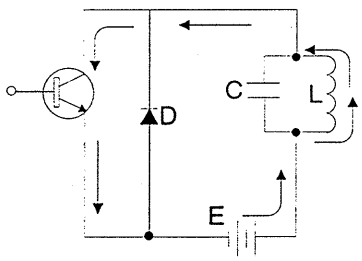

(a) Second half of scanning period (t1 - t2)

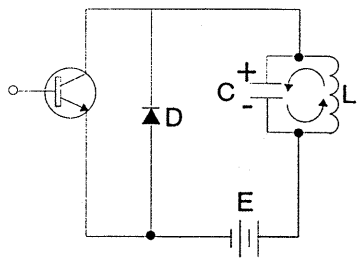

(b) First half of return line period (t2 - t3)

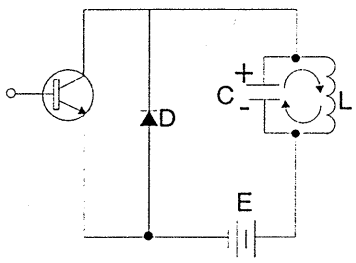

(c) Second half of return line period (t3 - t4), capacitor releases current

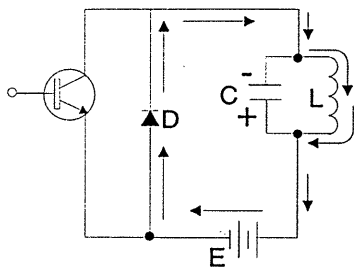

(d) First half of scanning period (t4 - t5)

Figure 3-9 Polarity of Transformer Voltage

independent oscillation circuits. If the current is suddenly cut off, then the polarity of the inverse voltage generated at L will be as shown in Figure 3-9 (b). This voltage is viewed as the source voltage and will cause current to flow, at which time the current flowing to C is as shown in Figure 3-8 (d). At time t3 this current is 0 but the voltage at the two capacitor terminals is at maximum. This waveform is known as flyback pulse, and is shown in Figure 3-8 (f).

(c) (t3 — t4) Period

The energy accumulated in C is released to the deflection yoke, the direction of the current flow being shown in Figure 3-9 (c). The current increases as the voltage on C decreases, and at time t4, the voltage of C is 0, at which time the current is at maximum, which means the current flowing into the deflection yoke is also maximum. C is then charged and if a damping resistor is not connected, the energy between L and C will be reversed, which is the oscillation frequency set by the oscillator at L and C.

(d) t4 — t5 Period

At t4, the voltage of C is 0. After this it is recharged in the opposite direction and this voltage exceeds the voltage of the power source at time t4. At this time the damping diode is ON and the L and C circuits are shorted out and stop oscillating. Because of this the time constant of r and L in the damping diode is large so the current flowing in the deflection yoke does not suddenly become 0. The current shows a linear decrease, and when it becomes 0 at time t5 the transistor is ON and the operation described above is repeated.

As described above, the current flowing in the deflection yoke during scanning is the sum of the current which has passed through the transistor and the damping diode current. Please refer to Figure 3-8 (e).

4. **Horizontal output operation:**

The actual output stage differs from the simple model described in a number of ways. Refer to the basic schematic of the major components in Figure 3-10.

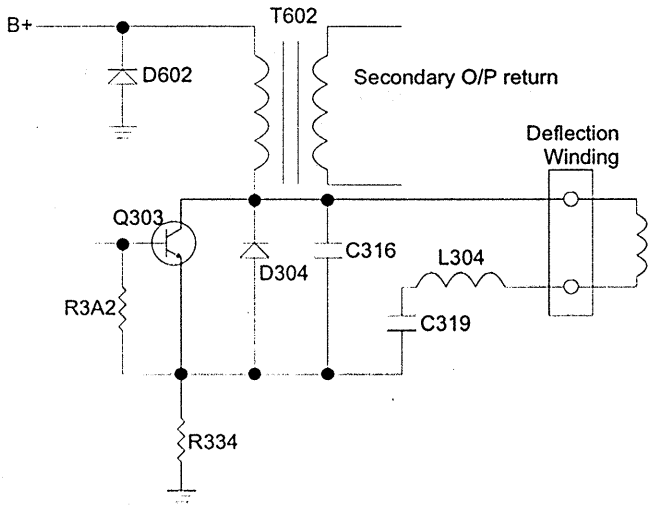

Figure 3-10 Basic Horizontal Deflection Output Circuit

The main inductance L is now divided into the primary winding of the Flyback Transformer (FBT) T602 and the deflection yoke winding. The deflection yoke is coupled through a capacitor C319, which has two function. Primarily it prevents DC unwanted DC currents

flowing through the deflection yoke which would otherwise cause an undesirable deflection of the CRT beam.

Secondly, the voltage drop across it due to the AC ramp current flowing causes a parabolic modulation in the slope of the ramp, leading to a progressive curve in the ramp, symmetrical about the zero current value as shown in Figure 3-11. This intentional distortion of the linear ramp is required to compensate for the 'S', or symmetric linearity distortion in the CRT.

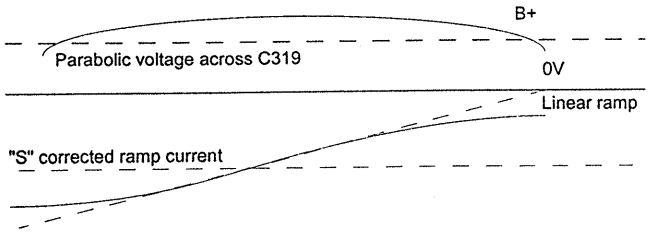

Figure 3-11 Linear Ramp Distortion

In series with C319 and the deflection yoke is another indicter, L304. This is a saturating indictor that is biased with a permanent magnet. Consequently this device has a linearity that is higher for current flow in one direction than in the opposite direction. This function provides compensation for resistive losses that would otherwise cause an undesirable exponential curve to the linear ramp, resulting in asymmetrical linearity errors in the displayed image.

The voltage seen in the output stage require special attention. The B+ supply can varying between 60-180V. The main flyback pulse seen across Q303 and associated components is around 1100Vp. Consequently, appropriate precautionary measures must be taken when servicing the monitor.

In addition to the basic topology as described above, there are a number of other additional devices. Q306, Q307, Q330 and Q333 can be independently turned on or off under logic control. These devices switch addition capacitors, C320, C322, C362 and C367 in parallel with C319 to alter the amount of 'S' correction at different horizontal scan frequencies.

D308 and D309 acts as a constant current source that can be under SW301 and SW302 control. This current source drives an adjustable constant current into L304. This current flows into the deflection yoke and adds a variable DC offset to allow image raster centering to be achieved.

The B+ provides current for the deflection coil (D/Y). Therefore, changes in deflection current can be controlled by modifying B+ voltage. As a result, horizontal width can be modified. In order to obtain the side horizontal width for different frequencies, a DC to DC feedback circuit is added. The synchronization signal comes from deflection output, from between C380 and C381 to base of Q603 which drives Q604 to trigger pin 4 of IC601. Feedback signal come from secondary on T601, via D604, R621 and R611 to become a DC voltage on pin 2 of IC601, another feedback signal passes through emitter of Q303, via R606 on pin 3 of IC601. There signals determine duty cycle of output signal of IC601 which is coupled to T603 to drive Q601, to control B+, making it possible to have correct deflection current and horizontal width on different frequencies. Similarly, output pin 36 and pin 37 of IC801 drive through R368, C348, R369, R366, C347, R367 and R610 to control duty cycle of IC601 output to achieve horizontal width adjustment.

During mode change, the B+ supply can be instantly turned off by pulling up the error amplifier input on pin 1 of IC601. These can be achieved by Q602, Q606 and Q605 which is driven from the logic circuit pin 9 of IC801 (MUTE). Whilst Q602, Q606 and Q605 can switch off the B+ supply almost instantly, the time taken for the supply to restart is programmed by the value of logic circuit.

In addition, the B+ (215V) supply is configured so as to maintain a constant anode voltage. The anode voltage is derived from the flyback transformer T103. As the flyback voltage across the primary is already a high voltage pulse of around 680Vp, it requires only a modest turns ratio to step this pulse up to around 27kV, the working voltage of the CRT. Refer to the basic schematic of the major components in figure 3-12.

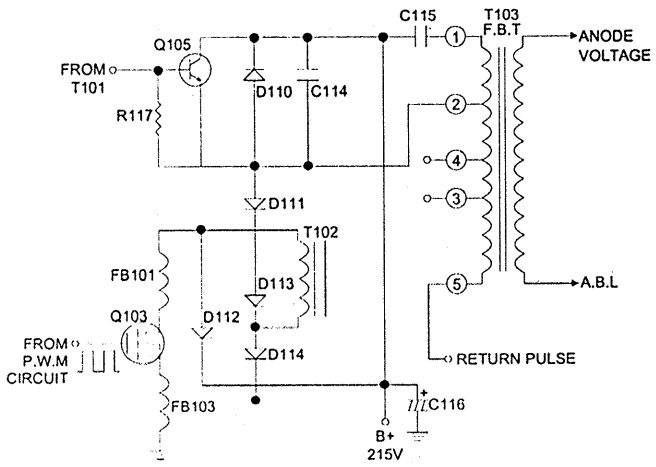

Figure 3-12 Basic High Voltage Output Circuit

The flyback pulse at the primary of T103 is proportional to the both frequency and the supply rail B+. In order to maintain the anode voltage at a constant 27kV a regulation system

is required. This is achieved using a PMW regulation stage formed by a IC101 driving a Q103. The causes a regulating current on primary T102, the voltage changes in secondary T102 result in a constant high voltage, synchronized by the horizontal oscillator. The IC101 has an error amplifier that generates an error signal from the feedback network formed by the high voltage bleed resistor and capactior (it is internal to T103). Resistors VR101, R103 and R104 set the DC feedback ratio, and by adjustment of VR101, this ratio can be adjusted at setup to set the high voltage at it's nominal value of 27kV. The AC frequency response of the serve loop is set by C104 and R114 for optimum stability and relegation characteristics.

The output of the error amplifier which can be observed on pin 1 of IC101 is internally compared with a DC voltage. This DC is produced across.

The average beam current through the CRT also flows through the secondary high voltage winding of T103 connected to pin 8 of T103, C132 and R138 smooths the pulse of current flowing in the secondary winding and the average DC current is supplies through a variable resistor VR106. When the average secondary current flowing exceed 460mA, this voltage begins to drop below this threshold. Thus a signal is generated which can be fed to video amplifier for automatic beam current limiting (ABL).

3.2.8. X-RAY Protection Circuit

The feedback pulse voltage from T103 F.B.T is regulated through D302 to obtain a DC voltage and the appropriate set voltage is distributed by R323 and R324. When the feedback pulse voltage exceeds the set voltage, a DC voltage develops in the cathode of ZD302 which turns on Q304 and Q305. As a result, the pin 1 of IC306 (adj-pin) to 0V, so IC306 is turned off, putting the 12V is not output. This is the phenomenon of high voltage protection.

3.2.9. The Focus Circuit

The output waveform come from pin 16 of IC302 through C122 and R123 to the amplifier Q106, via T104 with horizontal waveform to modulation. After, the wave coupling of the T103 which make the focus performance on the C.R.T. This is waveform shown in figure 3-13.

3.2.10. Horizontal linearity and CS Switching

Switching CS is necessary to ensure the lines are in accordance with the specifications in multi-sync monitors.

- For frequencies 81~95kHz, CS is only C319.

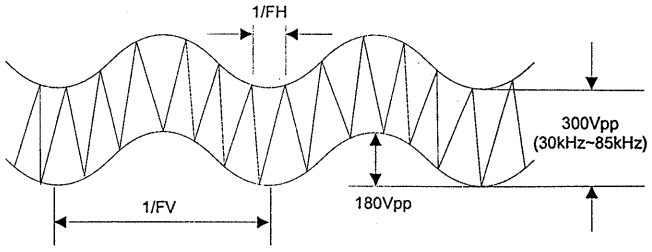

Figure 3-13 Focus Correction Wave

- For frequencies 69.5~81kHz, CS are C319 and C362.
- For frequencies 55~69.5kHz, CS are C319 and C322.
- For frequencies 45~55kHz, CS are C322, C319 and C362.
- For frequencies 41~45kHz, CS are C322, C320 and C319.
- For frequencies 36~41kHz, CS are C320, C322 C362 and C319.
- For frequencies 30~36kHz, CS are C320, C322 C362, C367 and C319.

Truth Table of Frequency Discriminator

CS / FEQ	CS1	CS2	CS3	CS4	DP5
30~36 kHz	L	L	L	L	L
36~41 kHz	L	L	L	H	L
41~45 kHz	L	L	H	H	L
45~55 kHz	H	L	L	H	L
55~69.5 kHz	H	L	H	H	L
69.5~81 kHz	H	H	L	H	L
81~95 kHz	H	H	H	H	H

Truth Table of Power Saving Detector

Mode	H-sync	V-sync	PMG1	PMG3	Mute	Blanking
ON	Pulse	Pulse	1	0	0	0
Standby	No Pulse	Pulse	1	1	1	1
Suspend	Pulse	No Pulse	0	1	1	1
OFF	No Pulse	No Pulse	0	1	1	1

3.3. Video Amplifier

The RGB video and sync signals are supplied through a video cable directly to the Video Board at connector P1. The RGB signals are terminated in 75 ohms by R38, R39 and R42.

The RGB signals then enter an IC2 LM1282 video pre-amplifier, providing synchronous black level clamping, variable picture contrast (gain) and RGB gain balance for alignment. Separate gain control voltages for the three pre-amplifier channels are provided via R32, R33 and R34 from the IC4

MS23934 DAC which is loaded by the microcontroller via the I2C bus. These inputs enable the individual gains of each channel to be varied to allow channel gain balance. In addition, a common signal is applied on pin13 of IC2 to adjust all three channels by the same amount, to allow for overall gain or contrast control.

A synchronous clamping signal is derived from the horizontal sync pulse by Q10. This takes the trailing edge of the horizontal sync pulse, differentiates it through C39, which is applied pin 15 of IC2. The timing is shown in Figure 3-14.

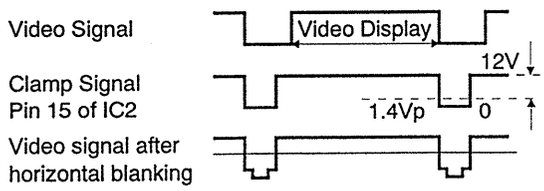

NOTE:

A. Clamp signal is generated from horizontal sync pulse time.

B. When the Clamp signal is less than 1.4Vp-p, the IC's internal clamp loop will operate; when greater than 1.4Vp-p, it will not operate.

Figure 3-14 Timing of Pin 15 Clamp Signal

The outputs of the video pre-amplifier are fed to IC1, a hybrid power amplifier IC type LM2408, through resistors R21, R23 and R25. In addition, on screen display video information generated by IC1 can be through pin 8, pin 9 and pin 11 of IC1.

IC5 is an on screen display processor. This is a simple video generation IC5 that has its own oscillator circuit, the oscillator circuit by using an internal Phase Locked Loop (PPL) the IC5 can sync to the incoming vertical and horizontal oscillator frequencies and produce the OSD video signals once initialized and loaded by the commands and data received on the I2C bus. When the OSD display is activated, the blanking output of the IC5 also sends a signal to the blanking input of IC2 (pin 16) to provide an optional black background for the OSD display.

The RGB signals are amplified to drive the CRT by an IC1 LM2408 hybrid amplifier and capacitively coupled to the cathodes. Brightness control is achieved by varying the bias of G1 of the CRT via a transistor stage formed by Q111 which is also driven by an output of the pin 12 of IC4.

IC1 amplifies the video signals to around 40Vp-p. The outputs are AC coupled to the CRT cathodes via C5, C35 and C55. In order to bias the DC level of the cathodes correctly, the AC coupled signal is DC restored by clamping to a DC voltage which can be varied under microprocessor control. Considering Red channel output on IC1 as an example, the signal is clamped by D4 to the voltage set by the transistor amplifiers formed by Q3, which amplify the adjustable voltage at the output of the DAC. A similar stage can be seen for the green and blue channel outputs.

When the RC video signal amplification circuit is added for amplification, this waveform will change as shown in Figure 3-15 (a). Without the DC component, as shown in Figure 3-15 (b), the DC level of darker and brighter displays will be different, so when this kind of signal without a DC component is sent to the CRT, it will cause the contrast of the image to

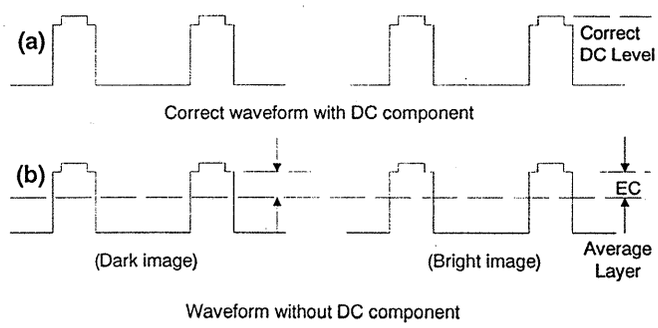

Figure 3-15 The Post Output Amplifier Circuit

change as the signal changes. Therefore Q3, Q33, Q53, D4, D34 and D54 serve as a DC clamp and the CRT's cathodes DC voltage can be adjusted by the pin 10, pin 11, pin 12 of IC5 TDA8444 DAC.

IC2 is an On Screen Display processor. This is a simple video generation IC2 that has its own oscillator circuit. The oscillator circuit by using an internal Phase Locked Loop (PLL) the IC2 can sync to the incoming vertical and horizontal oscillator frequencies and produce the OSD video signals once initialized and loaded by the commands and data received on the I2C bus. When the OSD display is activated, the blanking output of the IC2 also sends a signal to the blanking input of IC3 (pin 13) to provide an optional black background for the OSD display.

The RGB signals are amplified to drive the CRT by an IC1 VPS10S hybrid amplifier and capacitively coupled to the cathodes.

Brightness control is achieved by varying the bias of G1 of the CRT via a transistor stage formed by Q111 which is also driven by an output of the pin 9 of IC5. Vertical blanking signals is coupled into this amplifier Q204, Q205 and Q202 to prevent visible retrace lines.

3.4. Microprocessor And Sync Processing

The microprocessor is a MC68HC705BD7P type. It is particularly suitable as multisync computer monitor controller. This 8-bit microcontroller unit (MCU) contains an onchip oscillator, CPU, RAM, ROM, M-Bus serial interface system (IIC), parallel I/O, Pulse Width Modulator, Multi-Function Timer and sync Signal Processor. It has a 11.5k bytes of ROM and 384 bytes of RAM on internal which contains a basic communication 'boot' routine and various other simple routines. It is also used to store the OSD icon bit map. The main firmware routines and variable data stored in the 16k external EEROM, IC802.

When the micro is instructed via the IC2 bus, the internal ROM boot routine will load up the EEROM with program data from the IC2 bus. Thus it can be made to load its own firmware. From then on it will run jointly out of EEROM and internal ROM. Another important routine within the internal ROM is the routine which allows data writes to be made to the EEROM. This must be resident in the micro as it cannot run from the EEROM whilst writing data. These control the

addressing and I/O port selection from the micro CPU in the IC801 (MC68HC705BD7P).

Also specialized ports Pin16, Pin 17 and Pin18 of IC801 form the M-Bus interface which is used internally to set the DAC valuse and the OSD IC and CS table control IC (IC803). Other way, specialized ports pin 11 and pin 12 of IC801 from the M-bus interface which is used internally to set the data to external EEROM IC802. In addition, the I/O ports from pin 20 to pin 23 of IC801 from the M-bus interface which is used internally to set the front panel control.

There are 16 PWM channel. Channel 0 to channel 7 are dedicated PWM channels while channel 8 to channel 15 are shared with ports C under the control of the corresponding configuration register. Thus it can be made to control H-PHASE, PARALLELOGRM, PIN-BALANCE, TRAPE-ZOID, PINCUSHION, TILT, V-SIZE, H-SIZE and V-POSITION on the pin 1, pin 26, pin 27, pin 28, pin 29, pin 34, pin 35, pin 36, pin 37 and pin 38 of IC801.

The micro also drives the sync selection circuits. IC801 is used to set the polarity of the incoming sync signals and allows the micro to sample the vertical and horizontal syncs and to select the correct polarity on the outputs H-SYNC and V-SYNC appropriately. In addition, whilst sampling the polarity, the micro can measure the frequency of both syncs. By suitable selection of H-SYNC and V-SYNC control lines, it does this when ever a mode change occurs. A mode change is detected by either a change in vertical frequency, which is monitored by firmware, or by a sudden change in horizontal frequency.

When power is disturbed to the unit, the power reset line goes low. This also causes an input to the micro via the MODEC line. On detecting this interrupt, the micro first checks inputs Pin 4 of IC801. If these are also low, then it knows the MODEC interrupt was caused by an impending power failure. In this case the micro saves the current RAM data in EEROM and prepares for power off. The RESET line is delayed for 7ms by R801, ZD801, R803 and C801 to allow time for the data to be saved. The REST line then holds off the micro and the EEROM until power is good once more.

Notes

Section 4.

Setup Adjustments

4.1. Preparing the Display for Adjustment 4-1
4.2. Adjustment Procedures 4-1
4.3. High Voltage Verification 4-2
4.4. G1 Voltage Adjustment 4-2
4.5. Background Brightness Setting 4-2
4.6. Screen Brightness Adjustment 4-3
4.7. Magnetic Field Configuration 4-3
4.8. Raster Center Verification 4-3
4.9. Tilt Verification 4-3
4.10. Focus Verification 4-3
4.11. Color Misconvergence 4-3
4.12. Primary Test Mode Performance Adjustment 4-3
4.13. Performance Adjustments for All Preset Mode 4-3
4.14. Image Performance Verifications 4-4
4.15. Uniformity Verification 4-4
4.16. Brightness Verification 4-4
4.17. Display Size Stability 4-4
4.18. Color Purity Verification 4-4
4.19. Video Noise 4-4
4.20. Power Saving Check 4-4
4.21. DDC 1/2 Data Wirting 4-4

4.1. Preparing the Display for Adjustment

Before adjusting any the display settings or making final adjustments after service, perform the following pre-test settings to prepare the display for adjustment:

1. Be sure to allow the display to warm up for at least 30 minutes before making any adjustments.
2. When making tests and adjustments, the CRT should be facing east or west to minimize the affect of the earth's magnetic field.
3. Set the contrast control at 80% and the brightness control at 50% for all tests unless otherwise specified.
4. Thoroughly degauss the entire screen with a manual degausser before proceeding with tests.
5. All test should be performed with the rated power supply voltage unless otherwise specified.

4.1.1. Test Equipment Required

The following equipment will be required to make the tests and adjustments detailed in this section:

- ☐ Video signal and pattern generator
- ☐ Digital multimeter
- ☐ Degausser

4.2. Adjustment Procedures

4.2.1. Adjustment Sequence

This display undergoes an automatic alignement procedure during manufacture. This alignment procedure follows a fixed sequence of adjustments which are dupplicated in this section. When making manual adjustments during service, you should always make the adjustments in the order given here to ensure correct results.

4.2.2. Preset Timings Used During Adjustment

During alignment it is necessary to input certian preset timings stored in the display. The detailed parameters of all the preset timings are given in the table below for your reference.

IMPORTANT NOTE

The preset timings for different versions of this model may differ from those shown here. Be sure to check the list of preset timings for the unit being serviced.

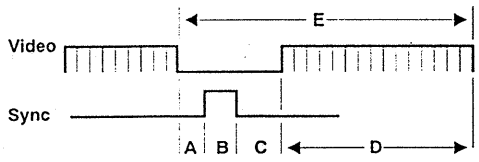

Mode Number	Mode 1	Mode 2	Mode 3	Mode 4	Mode 5	Mode 6	Mode 7	Mode 8	Mode 9	Mode 10
Data Pixel	640	640	800	1024	1024	1280	1280	1600	832	1152
Data Line	400	480	600	768	768	1024	1024	1200	624	870
H. Freq.(kHz)	31.469	37.500	46.875	60.023	68.667	79.976	91.146	93.750	49.725	68.680
V. Freq(Hz)	70.087	75.000	75.000	75.029	84.997	75.025	85.024	85.000	74.550	75.060
Pixel Rate(MHz)	25.175	31.500	49.500	78.750	94.500	135.000	157.500	202.500	57.280	100.000
Hor. FP µs(A)	0.636	0.508	0.323	0.203	0.508	0.119	0.406	0.316	0.559	0.320
Hor. Sync µs(B)	3.813	2.032	1.616	1.219	1.016	1.067	1.016	0.948	1.117	1.280
Hor. BP µs(C)	1.907	3.810	3.232	2.235	2.201	1.837	1.422	1.501	3.910	1.440
Hor. Active µs(D)	25.422	20.317	16.162	13.003	10.836	9.481	8.127	7.901	14.534	11.520
Hor. Total µs(E)	31.778	26.667	21.333	16.660	14.561	12.504	10.971	10.667	20.111	14.560
Ver. FP ms(A)	0.381	0.027	0.021	0.017	0.015	0.013	0.011	0.011	0.020	0.044
Ver. Sync ms(B)	0.064	0.080	0.064	0.050	0.044	0.038	0.033	0.032	0.060	0.044
Ver. BP ms(C)	1.112	0.427	0.448	0.466	0.524	0.475	0.483	0.491	0.784	0.568
Ver. Active ms(D)	12.711	12.800	12.800	12.795	11.183	12.804	11.235	12.800	12.549	12.667
Ver. Total ms(E)	14.269	13.333	13.333	13.328	11.765	13.329	11.761	13.333	13.413	13.322
Polarity(H.V)	-,+	-,-	+,+	+,+	+,+	+,+	+,+	+,+	-,-	-,-
Primary mode is 93.750kHz / 75.000Hz (1600x1200)										

Table 4-1 Table of preset Timing Parameters

IMPORTANT NOTE

The adjustment settings in this section are based on REVISION B of the factory alignment procedures. Appendices detailing changes in the factory alignment procedures that have occurred since publication of this service manual are available upon request.

Initial settings to be carried out manually prior to automatic alignment:

4.3. High Voltage Verification

1. Input a cross hatch pattern in 93.75KhZ (1600X1200) mode and adjust VR101 on the main board (see figure 4-1 for approximate location) so the high voltage is in the range 28kV~30kV the set will shut down.
2. Input a full white pattern in 31.47kHz (640×400) mode, check that the high voltage is in the range 26kV±0.3.

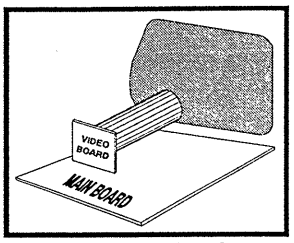

Location of PCBs

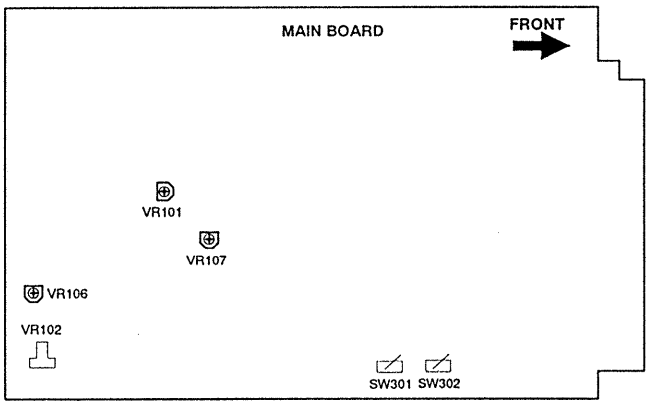

Figure 4-1 Location of on Main board

4.4. G1 Voltage Adjustment

Input a raster pattern (video OFF) in primary mode and push the external brightness control button to maximum. Adjust VR102 (see Figure 4-1 for approximate location) so that the voltage of G1 read on a digital multimeter is -45V±1.

Steps used in white balance adjustment:

4.5. Background Brightness Setting

1. Input a raster pattern in primary mode and push the external brightness control button to maximum. Adjust the SCREEN VR so background brightness is approximately 1.0FL±0.1.
2. Before carrying out white balance adjustment, make sure that the display size and linearity are in spec.
3. Before carrying out white balance adjustment, make sure that the VR106 (see Figure 4-1 for approximate location) position shall be turn counterclockwise to the end (ABL no action).
4. Before carrying out white balance adjustment, make sure that the internal contrast VR107 (see Figure 4-1 for approximate location) shall be turn to the center position.
5. Input timing in primary mode, and the white balance automatic adjust some item as blow.
   a) Input no video pattern in primary mode, and set-up brightness of raster white balance get the x,y value is x=0.346±0.01 y=0.359±0.01.
   b) Input a full white pattern in primary mode, and set-up 5000 degrees kelvin of picture white balance get the x,y value is x=0.346±0.01 y=0.359±0.01.
   c) Input a full white pattern in primary mode, and set-up 6500 degrees kelvin of picture white balance get the x,y value is x=0.313±0.01 y=0.329±0.01.
   d) Input a full white pattern in primary mode, and set-up 9300 degrees kelvin of picture white balance get the x,y value is x=0.281±0.01 y=0.311±0.01.

4.6. Screen Brightness Adjustment

1. Input a raster pattern in primary mode. Set external brightness key to maximum and external contrast key to minimum, then make sure that the raster brightness range is 0.8FL±0.2. If not in this range, adjust screen VR of F.B.T.
2. Input a raster pattern (video off) in primary mode. Set external contrast key to maximum and push external brightness key to brightness is 0.08FL (cut OFF), then switch to a display of full white pattern and adjust internal contrast VR107 and check that brightness at the center of the screen is in the range 30FL±1.
3. Input a full white pattern in primary mode. Set external brightness and contrast key to maximum. Adjust VR106 and check that brightness at the center of the screen is in the range 35FL±1.

Conclusion White Balance Adjustment:

4.7. Magnetic Field Configuration

Configure the magnetic field as follows:

- ☐ Northern hemisphere : H=0.01, V=0.45
- ☐ Southern hemisphere : H=0.01, V=-0.52

4.8. Raster Center Verification

Input a cross hatch pattern in 81.25kHz (1600x1200) mode, and check raster H-Center shall be less than 3mm (|L-R|≤3mm). If not in this ranged and select SW301 for adjustment raster H-center shall be less than 3mm, if not in this ranged again, please select SW302 for adjustment raster H-center in the specification.

4.9. Tilt Verification

Input a cross hatch pattern in primary mode and use the tilt rotation key to ensure that tilt is less than 1mm.

4.10. Focus Verification

1. Input a full white pattern in primary mode. Use the external brightness control to adjust background brightness so it is not visible and set external contrast so the brightness is 28FL, then switch to a display of cross hatch pattern.
2. Adjust the FBT focus VR1 and VR2 so the vertical line and horizontal line are as clear as possible.
3. Input a "o" characters pattern in primary mode and check "o" characters is clearest.

4.11. Color Misconvergence

1. Input a full white pattern in primary mode and adjust external brightness so there is no background brightness and external contrast so the screen brightness is 28FL.
2. Switch to a cross hatch pattern and verify that misconvergence in a circle measured from the center of the screen (Area A) is not greater than 0.3mm, and for all areas outside Area A is not greater than 0.4mm.
3. If not in the specification, after used the magnetic in a four corner adjustments for arrive to better color convergence.

Automatic camera alignment procedure:

The procedures listed below are those carried out using the automatic Camera Alignment System (CAS). These adjustments cannot be made manually but must be performed using the CAS software provided by the manufacturer.

4.12. Primary Test Mode Performance Adjustments

1. **V. RASTER CENTERING**
   Raster area centered vertically in the bezel.
2. **ROTATION (TILT)**
   Raster area aligned with bezel.

4.13. Performance Adjustments for All Preset Modes

1. **H POSITION**
   Centers the picture display horizontally in the bezel area (|L-R|≤3.5mm).
2. **H SIZE**
   Configures picture display width as 360± 3.5mm
3. **V POSITION**
   Centers the picture display vertically in the bezel area (|T-B|≤3.5mm).
4. **V SIZE**
   Configures picture display height as 270±3mm.
5. **V Linearity**
   Configures vertical linearity as less than 8% (primary mode is 6%).
6. **Rotation**
   Configures picture display rotation as less than 2mm.
7. **Pin-Balance**
   Sets left and right pin-balance distortion to less than 1.5mm.
8. **PINCUSHION**
   Sets left and right pincushion distortion to less than 1.5mm.
9. **Trapezium**
   Sets upper and lower trapezium distortion to less than 1.5mm.
10. **Parallelogram**
    Sets parallelogram distortion to less than 1.5mm.

Conclusion of automatic alignment:

4.14. Image Performance Verification

Input each of the preset timings and check that the following specifications are met:

1. **Horizontal Position**
   |L-R|≤3.5mm
2. **Horizontal Size**
   360±3.5mm
3. **Vertical Position**
   |T-B|≤3.5mm
4. **Vertical Size**
   270±3mm

5. **Horizontal Linearity**
   H≤10% (10 x 8 cross hatch pattern)
   This calculation is based on the following formula:

   $$\frac{Max - Min}{Max} \times 100\% \leq 10\% \text{ (primary mode is 9\%)}$$

6. **Vertical Linearity**
   V≤8.0% (10x8 cross hatch pattern).

   $$\frac{Max - Min}{Max} \times 100\% \leq 8\%$$

7. **Geometric Edge Distortion**
   All geometrics distortion shall be less than as below:
   Horizontal line ≤2mm
   Vertical line ≤2mm

8. **Recall Button Function**
   Adjust H/V phase and size at random using the external controls and press the recall button. Check that the image performance has returned to be in spec, which will indicate the recall button is functioning correctly.

4.15. Uniformity Verification

Input a full white pattern in primary mode, set contrast to maximum and check that there is no overshoot. Check that the brightness in the four corners of the screen is not less than 75% of that in the center of the screen.

4.16. Brightness Verification

1. Input a raster pattern (no video pattern) in primary mode. Adjust external brightness to maximum and measure the center of raster brightness is between 0.5 to 2.5FL.
2. Input a raster pattern (no video pattern) in primary mode. Adjust external brightness to 0.08FL (cut off).
3. Input a full white pattern and adjust external contrast to maximum then check that brightness at the center of the screen shall be more than 33FL. Adjust external brightness to maximum and check that brightness at the center of the screen is less than 40FL.

4.17. Display Size Stability

Inputer a full white pattern in primary mode, set external brightness at 5FL and measure the display size. Adjust the brightness to 30FL and remeasure the display size. The difference should be less than 0.8mm.

4.18. Color Purity Verification

1. Input a full white pattern in primary mode and adjust external brightness so there is no background brightness and adjust external contrast to 25FL. Make a visual check of color purity as follows:
   a) Input the red (R) signal only; no green (G) or blue (B) should be visible.
   b) Input the (G) signal only; no (R) or B should be visible.
   c) Input the (B) signal only; no (R) or (G) should be visible.

4.19. Video Noise

Input a cross hatch pattern or full white pattern in primary mode and make a visual check from a distance of 48.3cm (19 inches) for any video noise or other on-screen interference.

4.20. Power Saving Check

1. Input cross hatch pattern in primary mode.
2. Turn OFF H-Sync signal, the power indicator LED have to change the emitting color from green to orange, then turn ON H-Sync signal again, the picture shall be visible.
3. Turn OFF V-Sync signal, the power indicator LED have to change the emitting color from green to orange, then turn ON V-Sync signal again, the picture shall be visible.
4. Turn OFF H/V-Sync signal, the power indicator LED have to change the emitting color from green to orange, then turn ON H/V-Sync signal again, the picture shall be visible.

4.21. DDC 1/2 Data Writing

Writing the DDC 1/2 data in EEROM.

Notes

Section 5.
Troubleshooting

5.1. No Display at Power-on 5-1
5.2. No X-ray Operation 5-2
5.3. No Video Operation 5-3
5.4. Poor Vertical Linearity 5-4
5.5. Poor Horizontal Linearity 5-5
5.6. Poor Uniformity 5-6
5.7. Tilted Display Area 5-7
5.8. Misconvergence 5-8
5.9. Poor Regulation 5-9
5.10. Poor Focus 5-10
5.11. Poor Geometry Distortion 5-11

5.1. No Display at Power-on

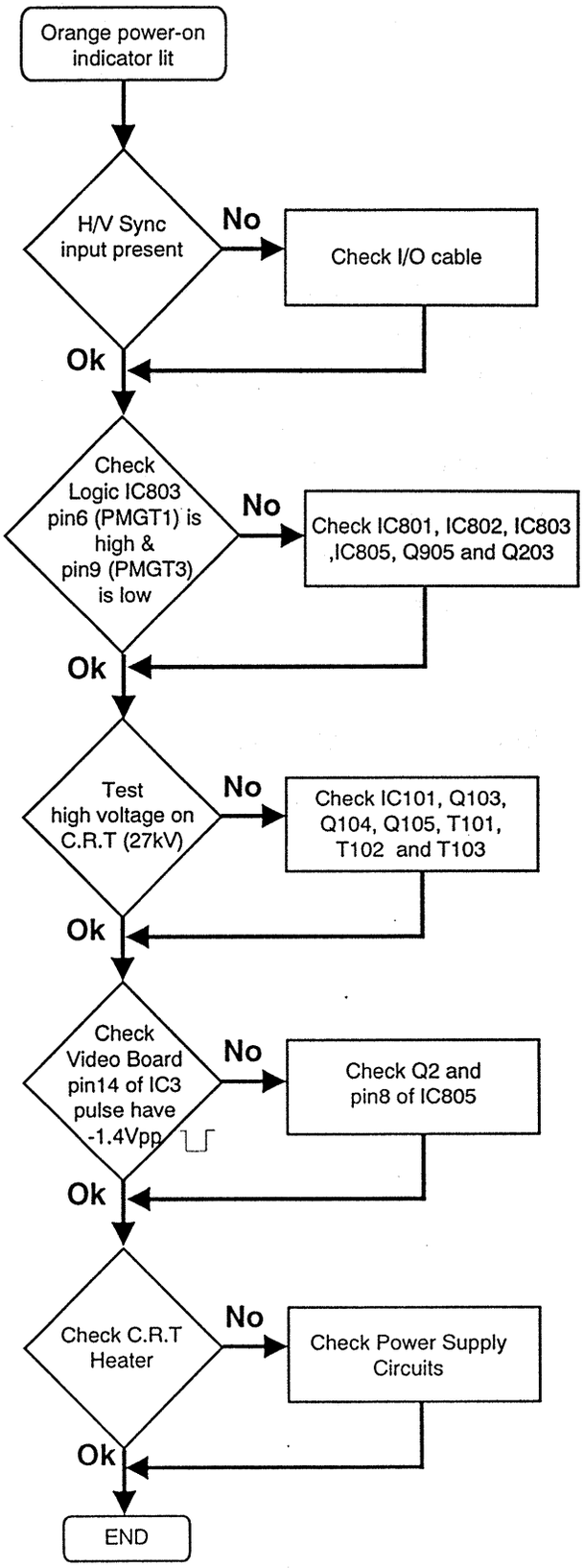

5.2. No X-ray Operation

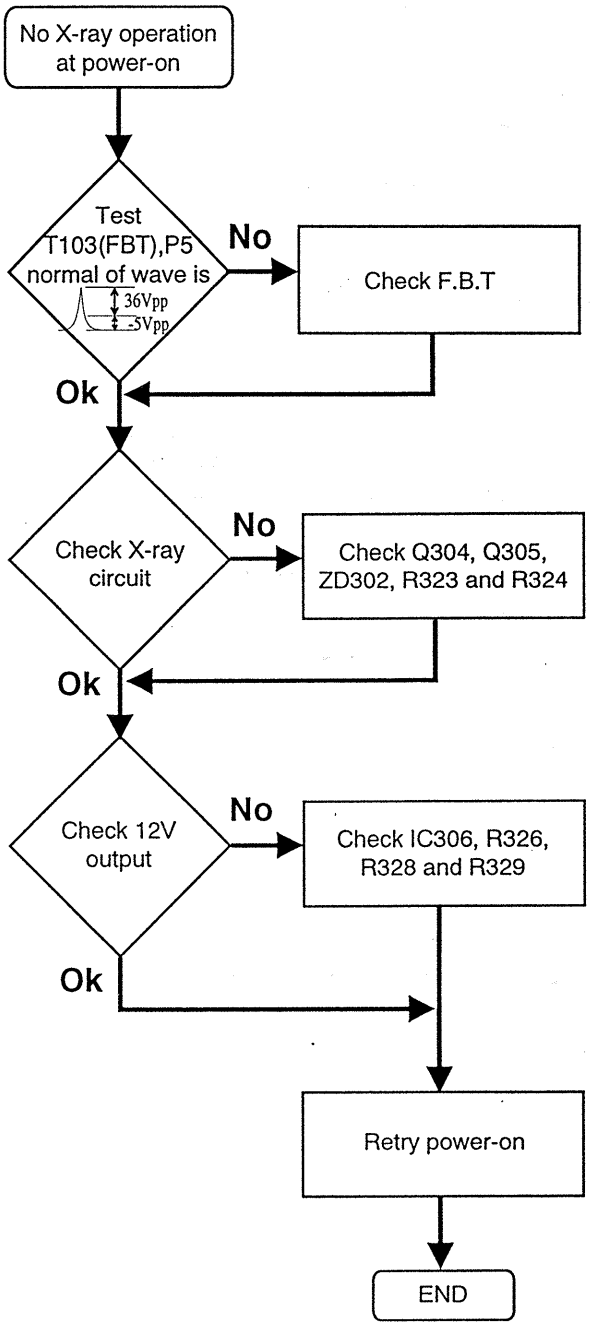

5.3. No Video Operation

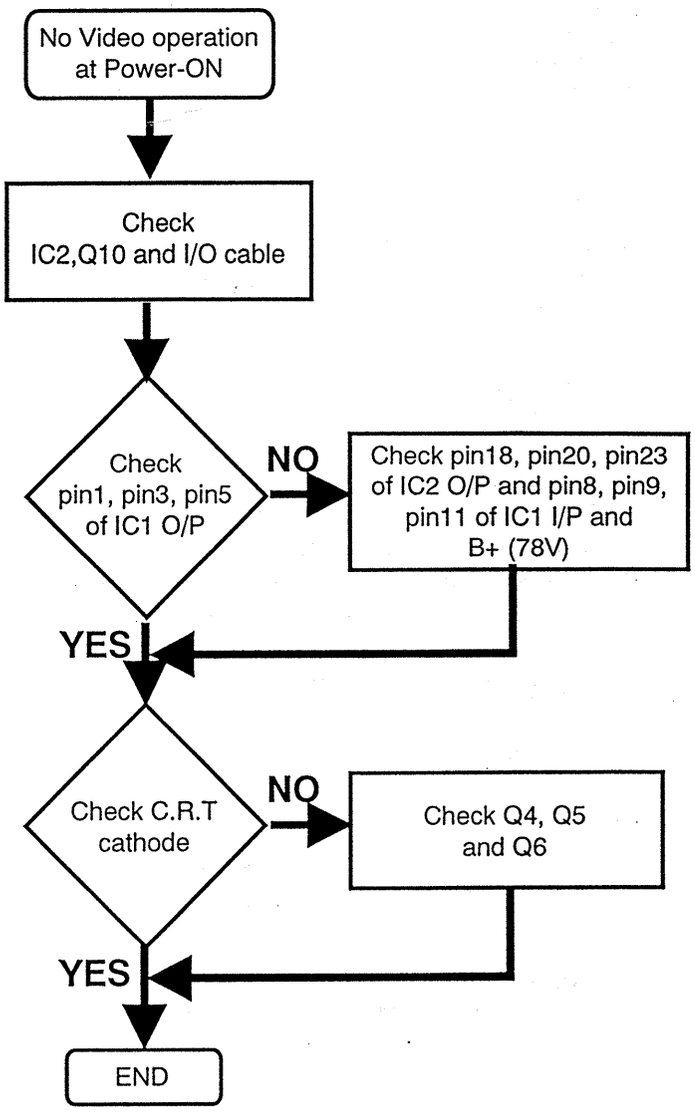

5.4. Poor Vertical Linearity

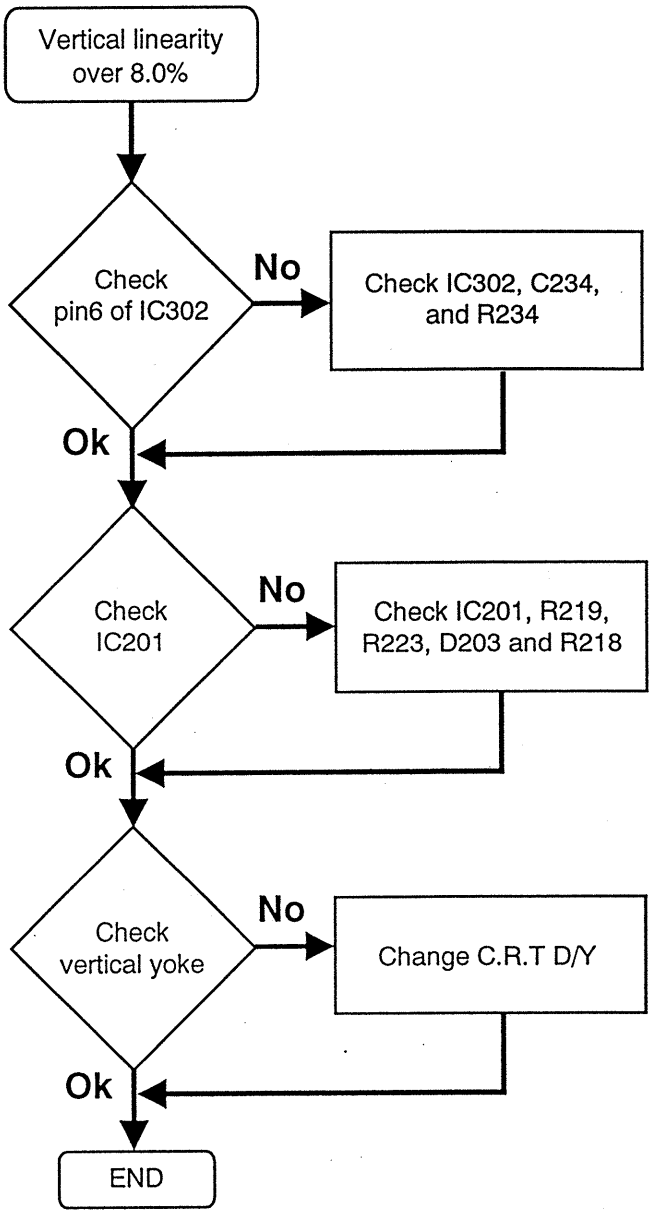

5.5. Poor Horizontal Linearity

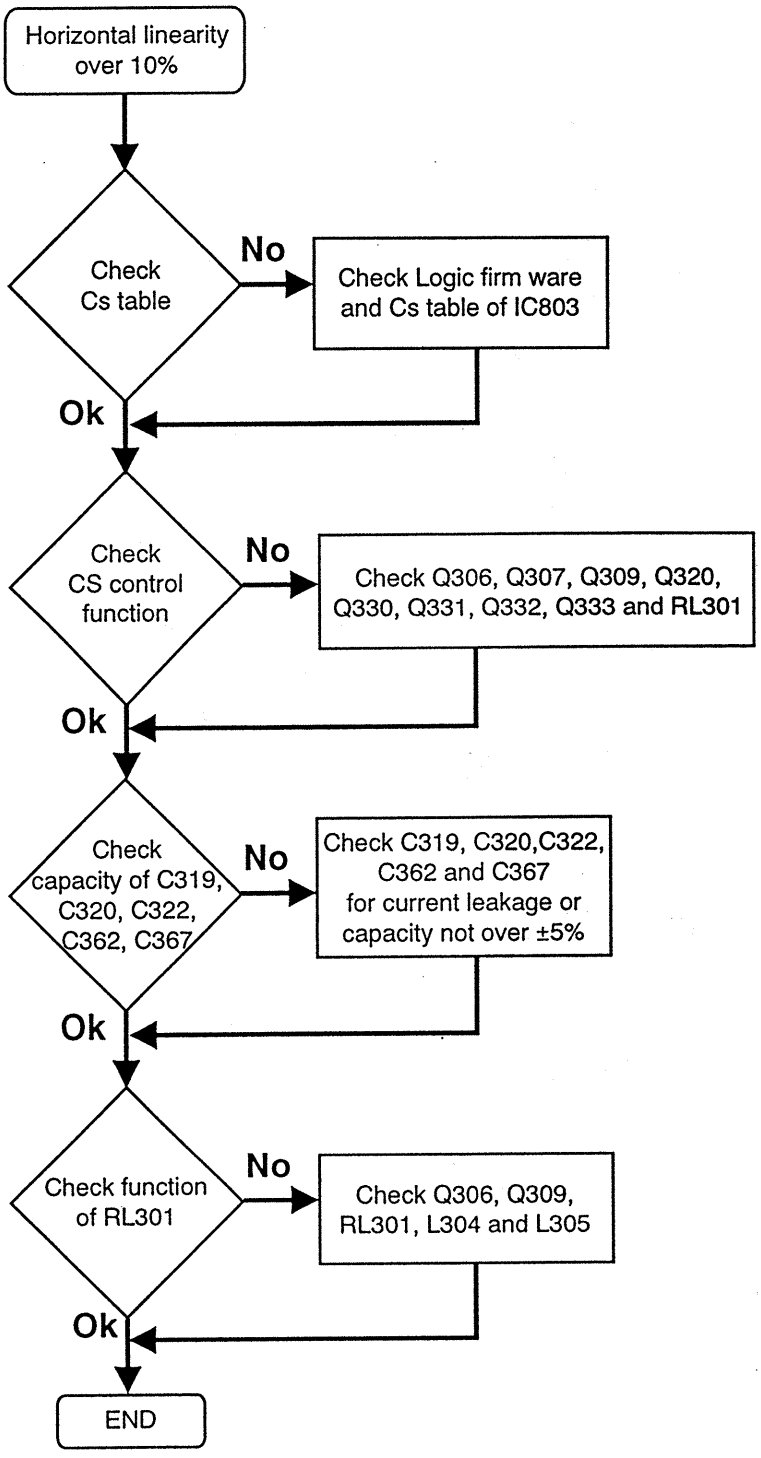

5.6. Poor Uniformity

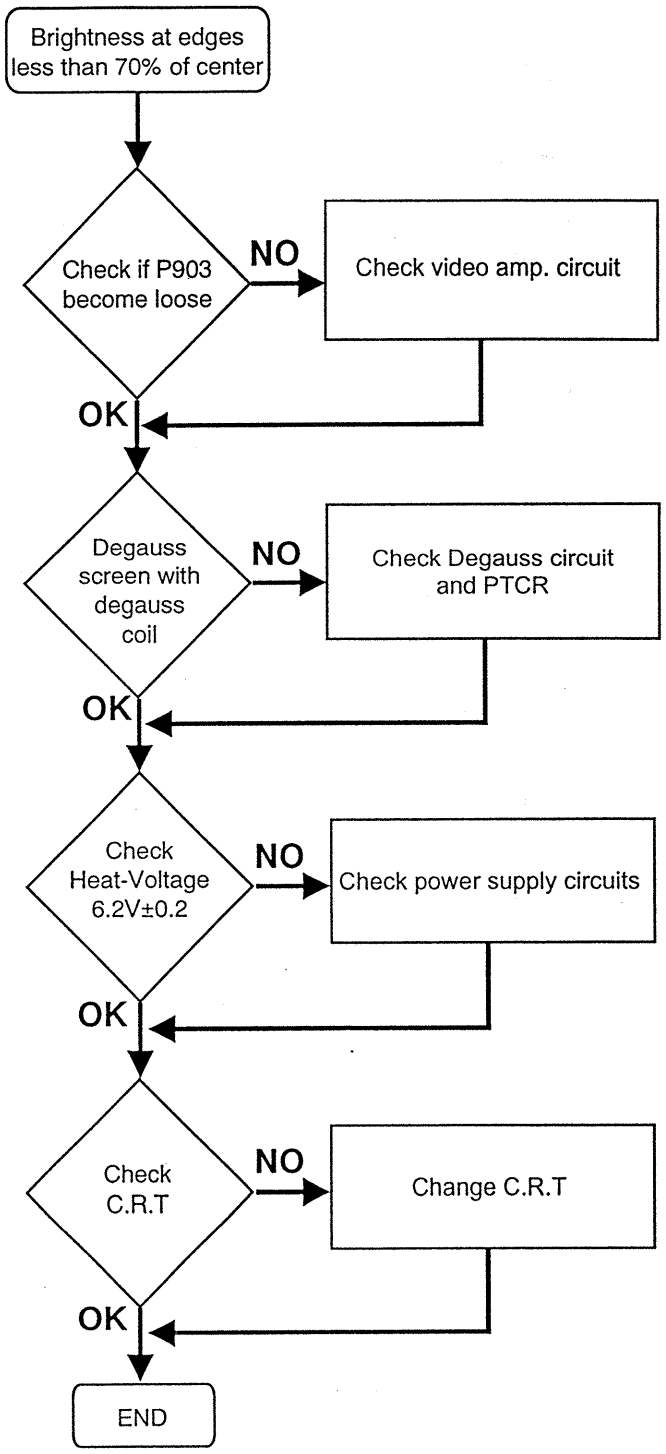

5.7. Tilted Display Area

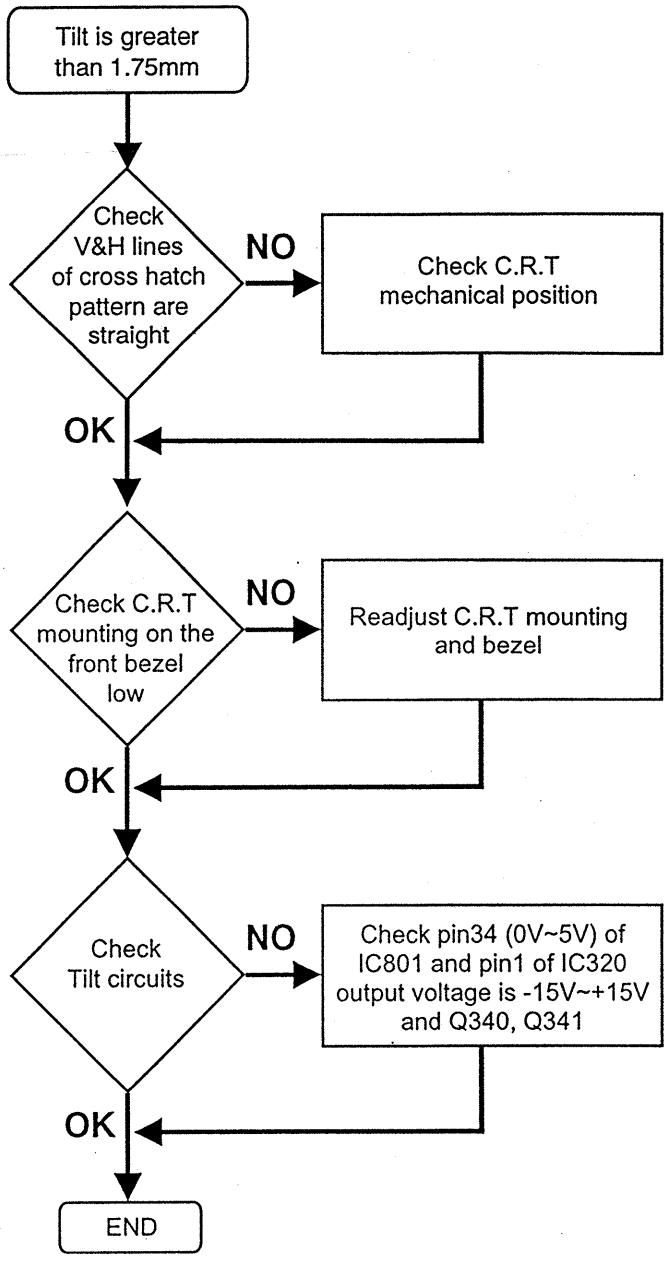

5.8. Misconvergence

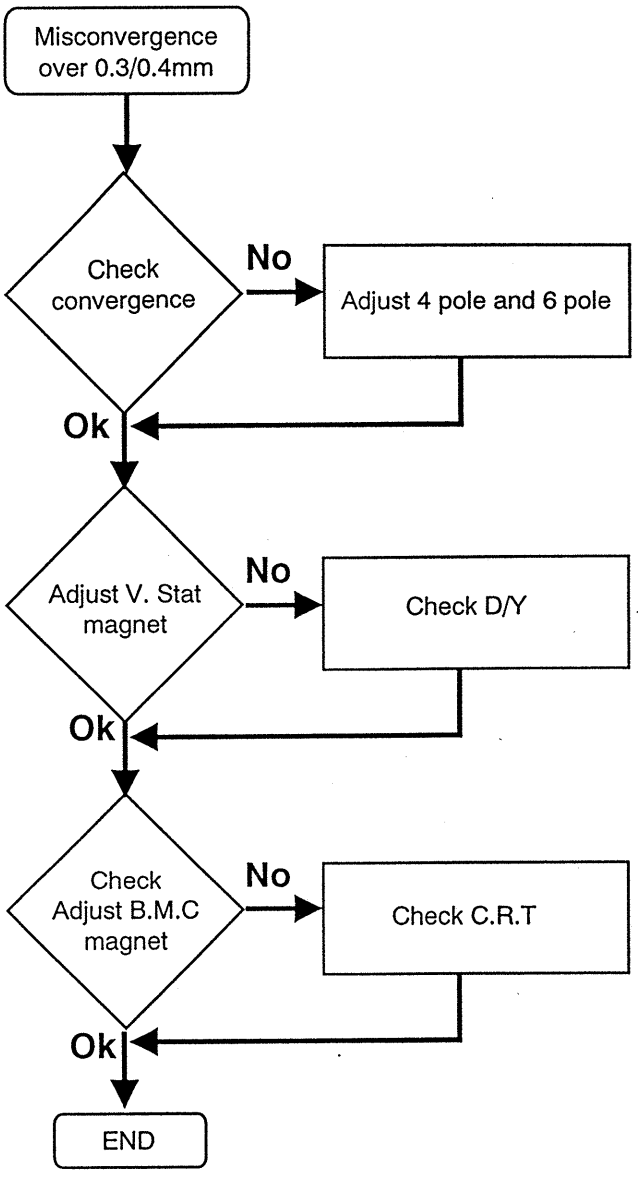

5.9. Poor Regulation

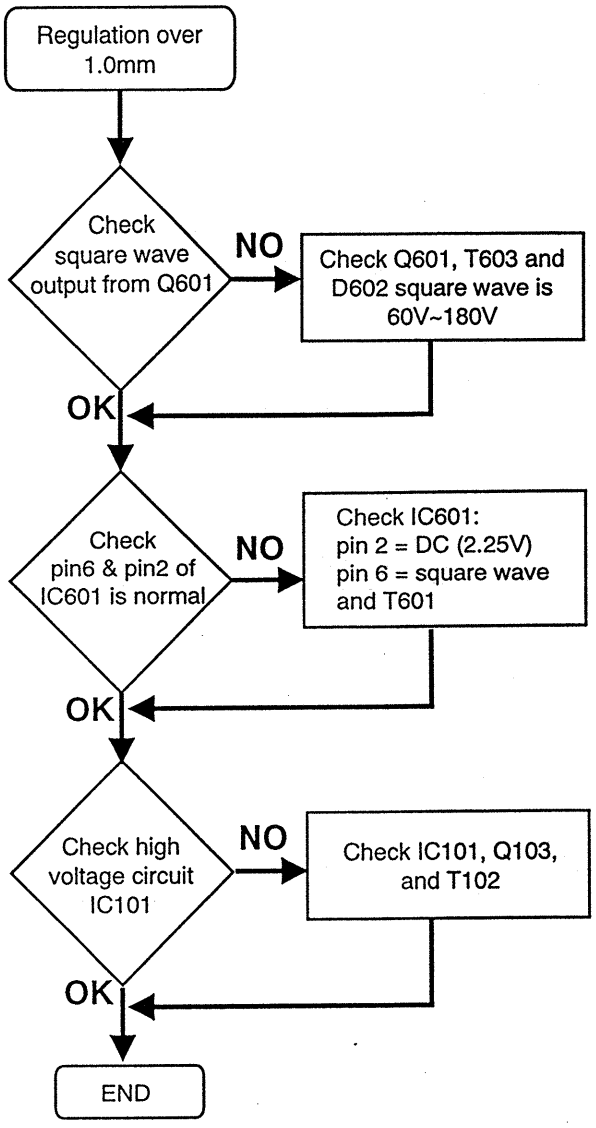

5.10. Poor Focus

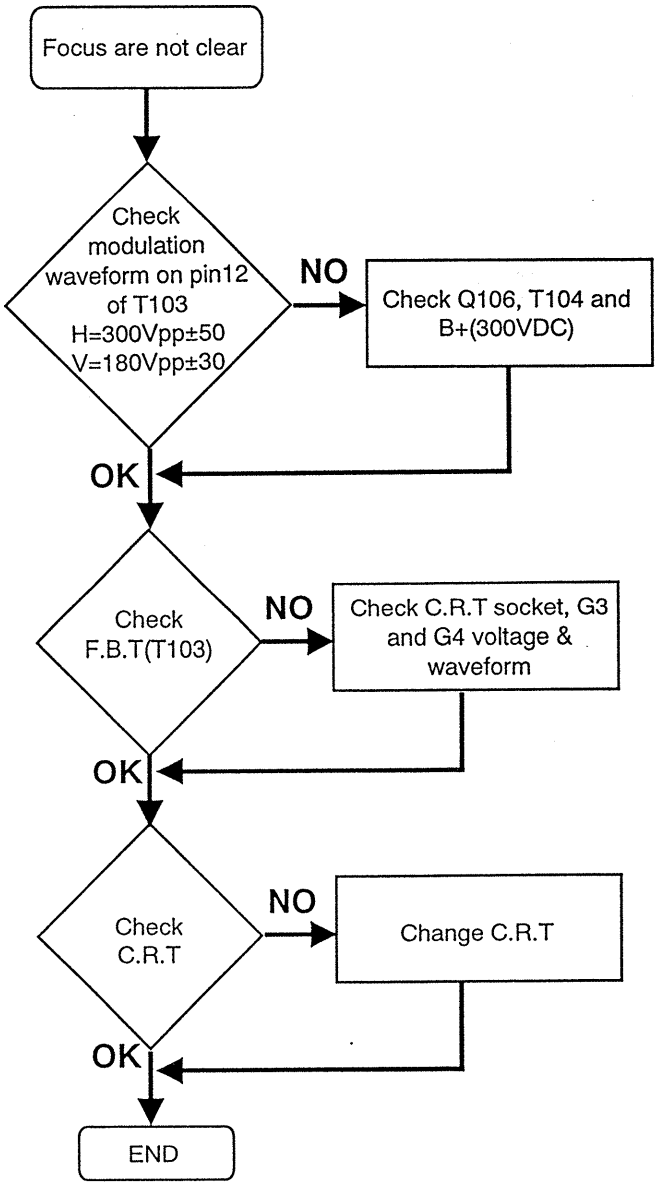

5.11. Poor Geometry Distortion

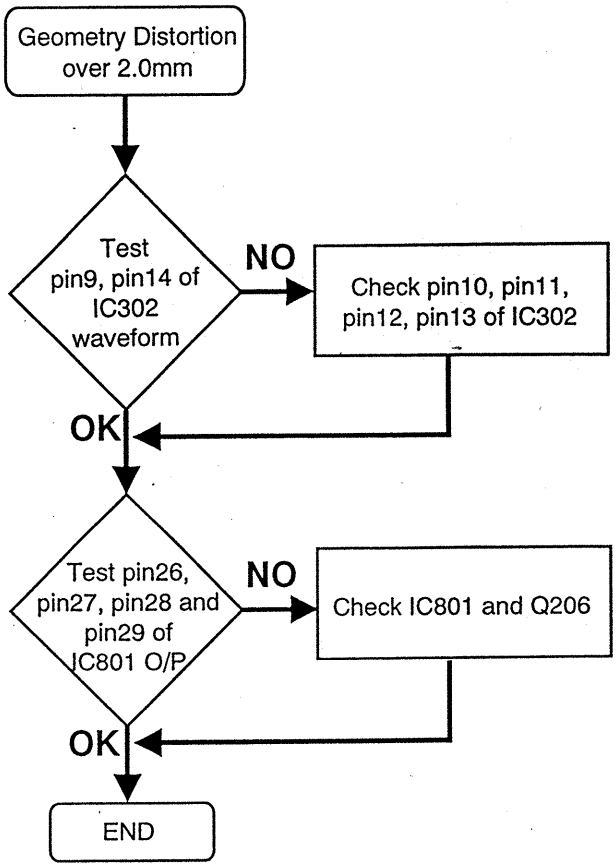

Section 6.

Printed Circuit Boards

6.1. Neck Board 6-1
6.2. Main Board 6-2
6.3. Control Board 6-3
6.4. PCB Wiring Connection 6-3

6.1. Neck Board

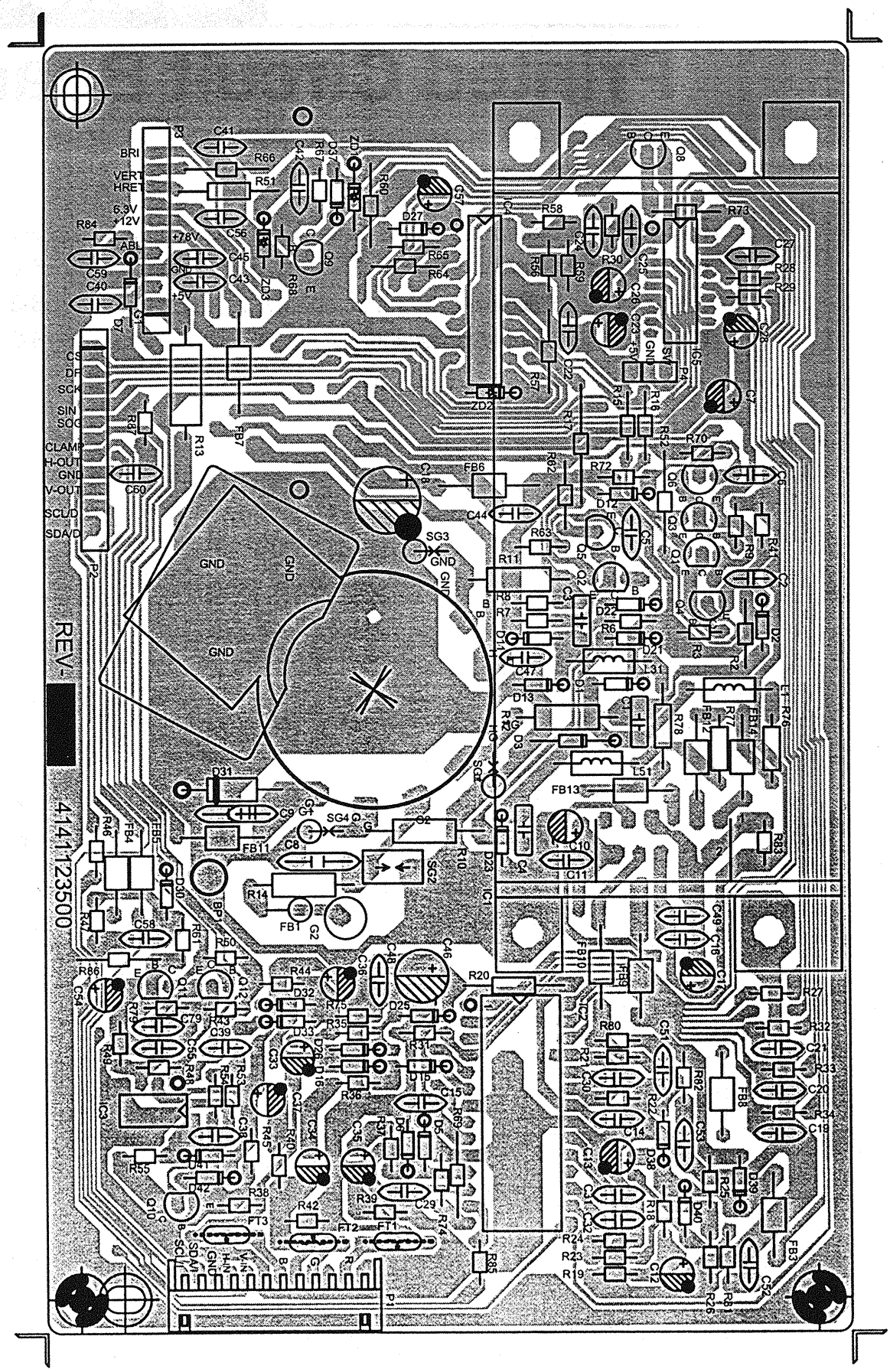

Figure 6-1 Neck Board (Solder Side)

6.2. Main Board

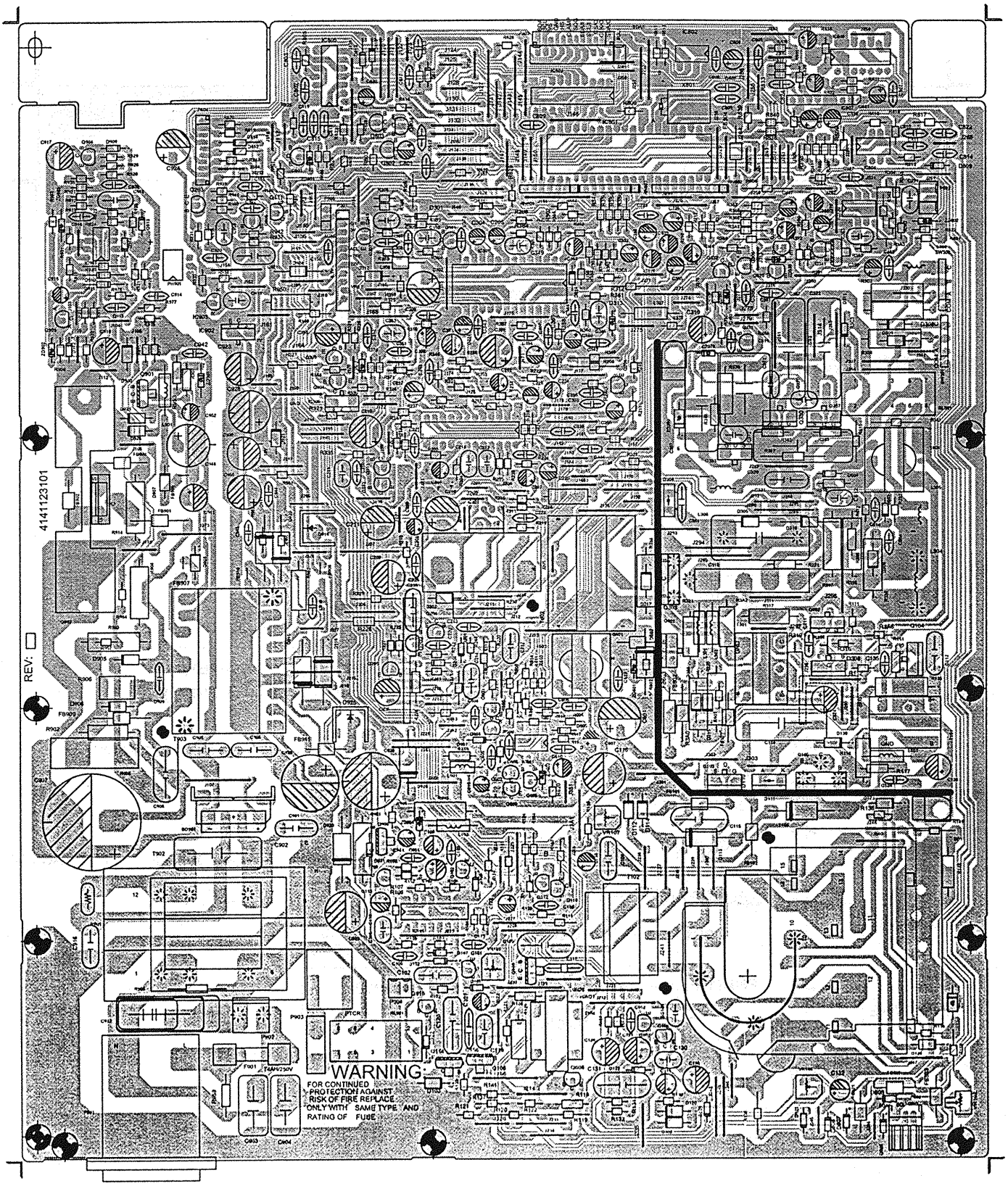

Figure 6-2 Main Board (Solder Side)

6.3. Control Board

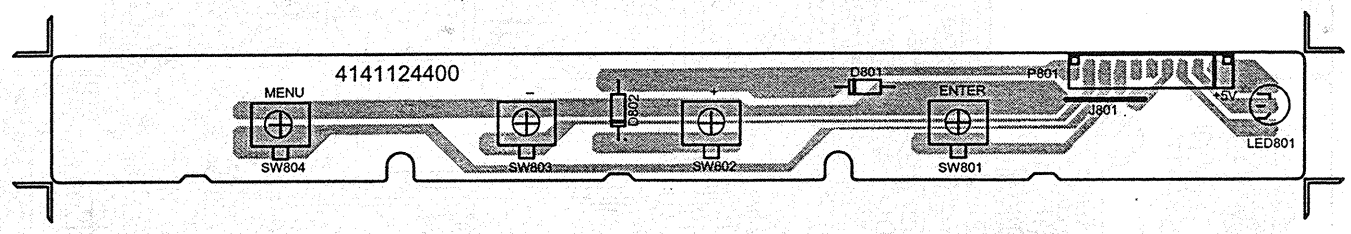

Figure 6-3 Control Board (Solder Side)

6.4. PCB Wiring Connection

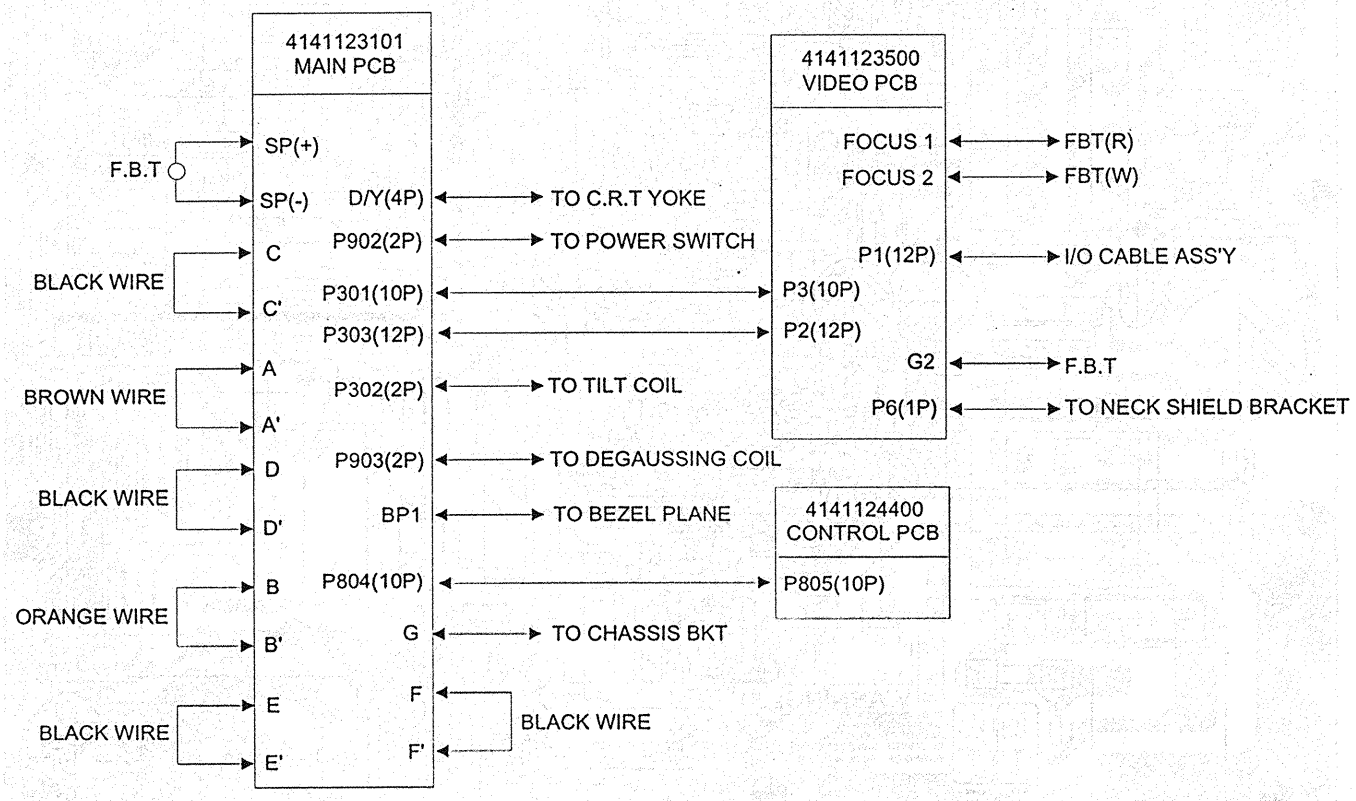

Figure 6-4 PCB Wiring Connection

Section 7.

Schematic Diagrams

7.1. Neck Circuit Diagram 7-1

7.2. SPS and Deflection Circuit Diagram 7-1

7.1. Neck Circuit Diagram

Please refer to the attached circuit diagram.

7.2. SPS and Deflection Circuit Diagram

Please refer to the attached circuit diagram.

DATE	ECN/ECO NO.
07-02-'97	N-07019705EG

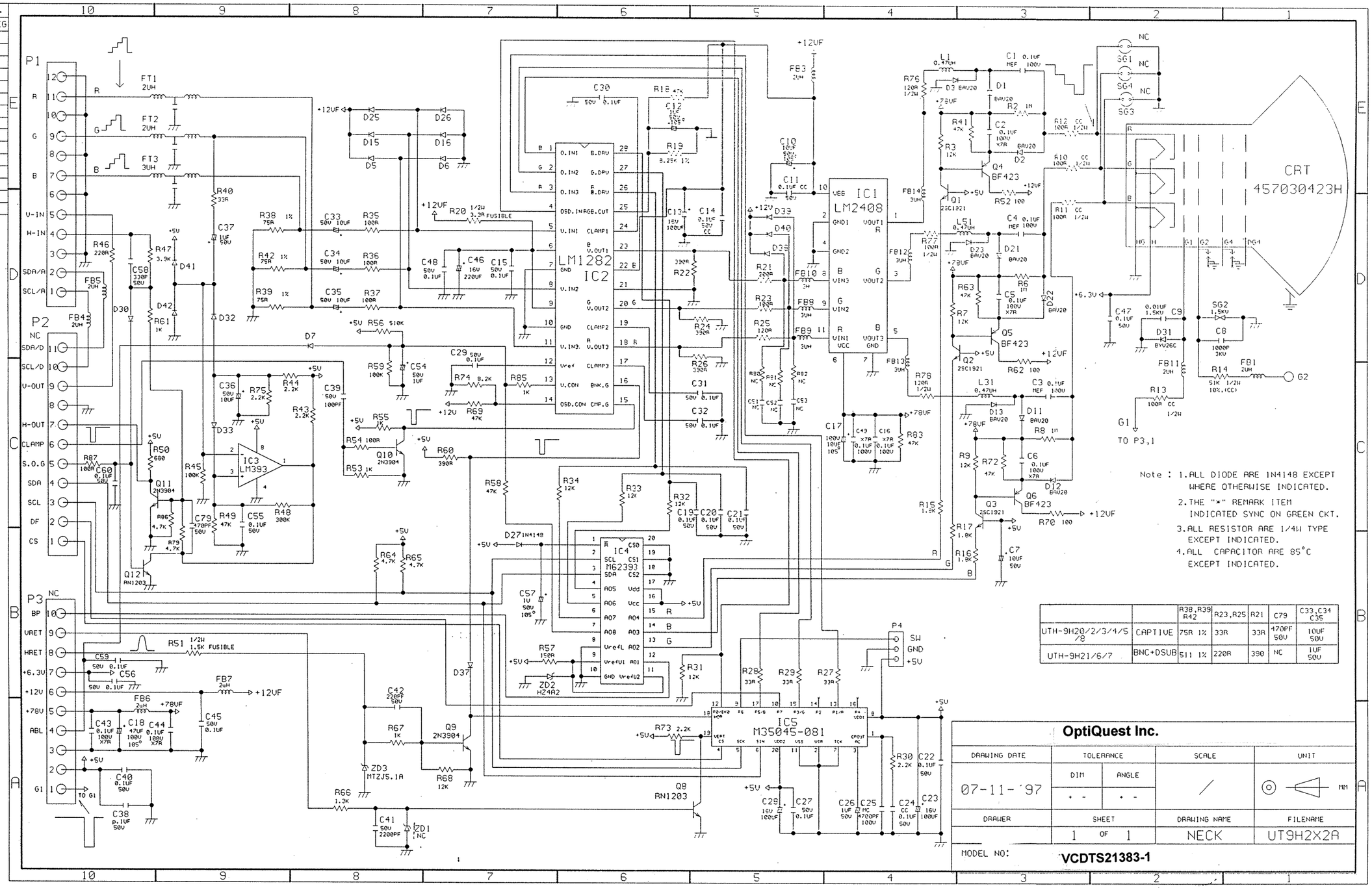

		R38,R39 R42	R23,R25	R21	C79	C33,C34 C35
UTH-9H20/2/3/4/5/8	CAPTIVE	75R 1%	33R	33R	470PF 50V	10UF 50V
UTH-9H21/6/7	BNC+DSUB	511 1%	220R	390	NC	1UF 50V

OptiQuest Inc.

DRAWING DATE	TOLERANCE DIM	TOLERANCE ANGLE	SCALE	UNIT
07-11-'97	+ -	+ -	/	MM
DRAWER	SHEET 1 OF 1		DRAWING NAME NECK	FILENAME UT9H2X2A

MODEL NO: **VCDTS21383-1**

Confidential - Do Not Copy

DATE	ECN/ECO NO.
06-25-'97	N-06209704EG
07-04-'97	0-07019701ET
07-17-'97	0-07019706RO

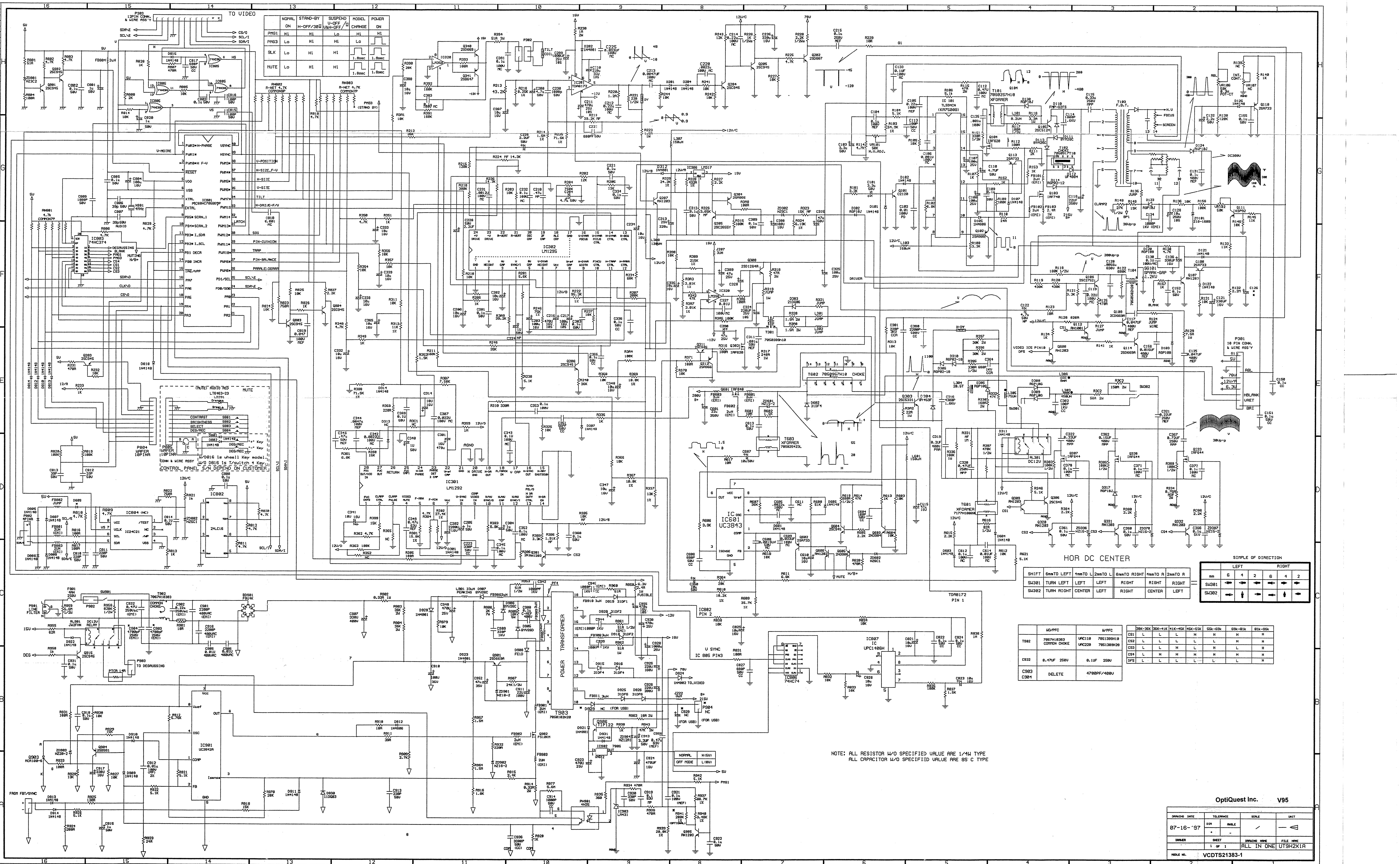

	NOMAL ON	STAND-BY H-OFF/30W	SUSPEND V-OFF V&H-OFF/W	MODEL CHANGE	POWER ON
PMG1	Hi	Hi	Lo	Hi	Hi
PMG3	Lo	Hi	Hi	Lo	⎍
BLK	Lo	Hi	Hi	⎍ 1.8sec	⎍ 1.8sec
MUTE	Lo	Hi	Hi	⎍ 1.8sec	⎍ 1.8sec

HOR DC CENTER

SHIFT	6mmTO LEFT	4mmTO L	2mmTO L	6mmTO RIGHT	4mmTO R	2mmTO R
SW301	TURN LEFT	LEFT	LEFT	RIGHT	RIGHT	RIGHT
SW302	TURN RIGHT	CENTER	LEFT	RIGHT	CENTER	LEFT

SIMPLE OF DIRECTION

mm	LEFT 6	LEFT 4	LEFT 2	RIGHT 6	RIGHT 4	RIGHT 2
SW301	←	←	←	→	→	→
SW302	→	↑	←	→	↑	←

	WO/PFC	W/PFC
T902	7067H10303 COMMON CHOKE	VAC110 7051309H10; VAC220 7051309H20
C932	0.47UF 250V	0.1UF 250V
C903 C904	DELETE	4700PF/400V

	30K-36K	36K-41K	41K-45K	45K-55K	55k-69k	69k-81k	81k-95k
CS1	L	L	L	H	H	H	H
CS2	L	L	L	L	L	H	H
CS3	L	L	H	L	H	L	H
CS4	L	H	H	H	H	H	H
DF5	L	L	L	L	L	L	H

NORMAL	H(5V)
OFF MODE	L(0V)

NOTE: ALL RESISTOR W/O SPECIFIED VALUE ARE 1/4W TYPE
ALL CAPACITOR W/O SPECIFIED VALUE ARE 85 C TYPE

OptiQuest Inc. V95

DRAWING DATE	TOLERANCE	SCALE	UNIT
07-16-'97	DIM + / ANGLE -	/	— ◁
DRAWER	SHEET 1 OF 1	DRAWING NAME: ALL IN ONE	FILE NAME: UT9H2X1A
MODLE NO.	VCDTS21383-1		

Confidential - Do Not Copy

Section 8.
Mechanical Parts

8.1. Key to Exploded View 8-1
8.2. Exploded View. 8-2

8.1. Key to Exploded View

REF.	PART NO.	DESCRIPTION
1	1Q010K9H22	#BEZEL
2	8127113006	SCREW PAN(+)/HD CAP TAPPING M3X6 FOR TOP SHIELD & U-BKT X4,HOLDER(R)(L) & U-BKT X2,U-BKT & MAIN PCB X6
3	2004099H10	#HOLDER (L) FOR BEZEL & U-BKT
4	8418114012	SCREW B/HD M4X12 TAPPING "P" FOR HOLDER (R) & BEZEL X2, HOLDER (L) & BEZEL X2
5	2003099H10	#HOLDER (R) FOR BEZEL & U-BKT
6	7010033719	#CRT M46LLQ683X01 (S)
7	8513145025	SCREW W/LOCK WSR HEXAGON(+) /HD FOR CRT & BEZEL
8	1023094330	SPACER RING
9	C001139H10	CRT BRAID WIRE ASS'Y
* 10	7020199H10	#DEGAUSSING COIL
11	1QA70K9H10	#POWER KNOB
12	2011099H10	POWER SPRING
13	1Q310K9H10	#CONTROL PANEL ASS'Y (CONTROL PANEL 1Q210K9H10 & LENS 1410007K40)
14	8504113006	SCREW BID(+) M3X6 MACH W/DISK
15	1B550C7H10	PUSH BAR
16	2006097H10	SWITCH BRACKET
17	4410202005	POWER SWITCH SS-160-7S SPST FOR SW901
18	8418113010	SCREW BIND(+) TAPPING M3X10 ZI FOR PCB & CONTROL PANEL X4, SWITCH BRACKET & CONTROL PANEL
19	UT9H200444-V	CONTROL PCB ASS'Y
20	1QAK0K9H10	#PIANO KEY
21	1AI0019H10	#RETAINER
22	8418113012	SCREW BIND(+) M3X12 P ZINC CONTROL PANEL & BOTTOM X2, BTM & U-BKT X4
23	1Q030K9H10	#BOTTOM
24	9021097M10	FOOT
25	1H050K9H10	#BASE
26	UT9H220144-V	MAIN PCB ASS'Y
27	8026113006	SCREW B/HD M3X6 TAPPING "B" FOR BTM SHIELD & U-BKT,PCB Q902 HEAT SINK X2,U-BKT & MAIN PCB X1
28	3011100030	NUT ISO HEX M3 Z1NC
29	36523LSC12	SPACER SUPPORT (LSC-12) FOR BTM SHIELD
30	2005099H10	#BOTTOM SHIELD
31	2001099H10	#U BRAKCET (I/O CABLE)
32	9004099H20	DECO PLATE (I/O CABLE)
33	2017094030	GROUND CLAMP FOR I/O CABLE & U-BKT
34	8121114008	SCREW CAP BID(+) M4X8 TAPPING FOR I/O CABLE CLIP
35	C7102H2210	I/O CABLE ASS'Y W/DDC 1.8M
36	2006099H10	#NECK COVER (F)
37	8026113008	SCREW B/HD M3X8 TAPPING "B" FOR NECK COVER(F) & HEAT SINK X2
38	7067F20122	LINE FILTER IX-0342-P FOR P901
39	8504113010	SCREW BIND(+) M3X10 MACH W/DIS FOR FILTER & U-BKT X2
40	UT9H200244-V	NECK PCB ASS'Y
41	2007099H10	#NECK SHIELD
42	2008097H10	NECK COVER (B)
43	9010099H10	#SPONGE FOR NECK SHIELD (B)
* 44	2012197H10	TOP SHIELD
45	2013099H10	#REAR SHIELD
46	1Q020K9H10	#BUCKET
47	8418114022	SCREW BID(+)/HD M4X22 TAPPING FOR BEZEL & BUCKET X4
48	8037114016	SCREW BIND(+) M4X16 HI-LOW FOR BEZEL & BOTTOM X2, RETAINER & BASE X2

Other parts list

REF.	PART NO.	DESCRIPTION
	3011100040	NUT M4 ZN3C FOR YOKE & GND WIRE C459460B10 FIX
	36723CH056	DEGAUSSING COIL CLIP FOR CRT & DEGAUSSING COIL X2
	463310000N	AC POWER CORD WALL 6FT GRY FOR UTH-9H22
	463110000N	AC POWER CORD PC VDE GRY 6FT FOR UTH-9H23
	5290005000	TUBE-SHRINK ID=5¢ FOR SW901
	5541025095	CABLE TIE 2.5X90
	5541025160	CABLE TIE-BINDING 2.5X160
	8127113006	SCREW PAN(+)/HD CAP TAPPING M3X6 FOR GND & NECK COVER(F) X1
	9012099H22	#MAUNAL
	C4595G1111	GND WIRE ASS'Y FOR REAR PANEL TO VIDEO SHIELD
	C4597H1010	GND WIRE ASS'Y FOR REAR PANEL TO VIDEO/TOP SHIELD
	C488031217	CONN. 3P & WIRE ASS'Y 400mm FOR P902

8.2. Exploded View

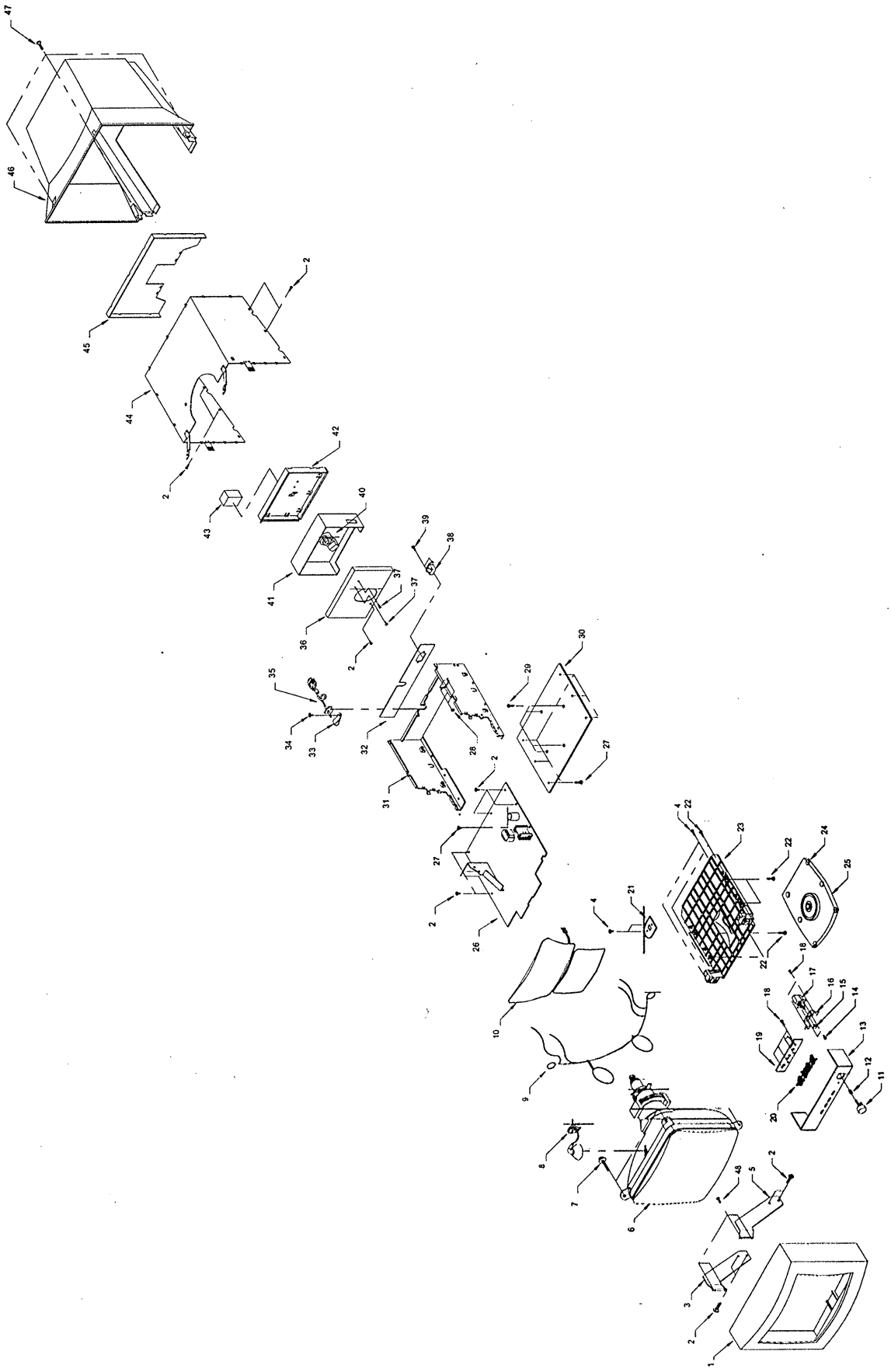

Figure 8-1 Exploded View

Confidential - Do Not Copy

Notes

Section 9.

PCB Component List

9.1. Explanation of Parts Listing. 9-1
9.2. Main Board 9-1
9.3. Neck Board 9-7
9.4. Control Board 9-9

9.1. Explanation of Parts Listing

This section contains a complete listing of the components * used on the printed circuit boards contained in the system. For a listing of the mechanical parts, please refer to Section 8., Mechanical Parts.

The list of parts in this section is separated by PCB, and the order of the listing is based on the location reference (REF.) printed on the circuit board and shown in the schematics. Components without a reference location are listed at the beginning of each table in order of the part number, and the location reference of the part with which they are connected is given in the description.

For example:

	2003097301	HEAT SINK FOR Q1

shows Part No. 2003097301, which is connected or related to the components with a location reference of Q1.

Shaded items indicate comonents that are critical for safety or are of proprietary design and must be replaced with parts of the exact same specification or ordered directly from the manufacturer.

For example:

Q1	4101515070	TRS. MOSFET 2SK1507 TO-220

Indicates that the TRS. MOSFET, Part No. 4101515070 located at reference Q1, should onlybe replaced with the exact same part ordered from the manufacturer.

9.2. Main Board

REF.	PART NO.	DESCRIPTION
	UT9H220144 -V	MAIN PCB ASS'Y
	1003090000	NYLON BUSHING FOR Q103,601 (IRF740,IRF840,STP10NA40)
	2000000011	CLIP WIRE FOR MAIN WIRE
	2003294030	HEAT SINK VIDEO FOR IC306
	2004191630	HEAT SINK HOLDER FOR Q902 (TRS.FS10KM-12)
	2004197H10	#HEAT SINK FOR FBT COVER
	2005397H10	#FBT COVER
	2007891030	HEAT SINK FOR BD901
	2008283080	HEAT SINK FOR D918
	2008283080	HEAT SINK FOR D925
	2009099H10	#HEAT SINK FOR Q308
	2010099H10	#HEAT SINK FOR FBT COVER
	2011092H20	#HEAT SINK FOR Q902
	2017097H10	HEAT SINK FOR IC201
	2046294000	HEAT SINK FOR IC902
	3011100030	NUT ISO HEX M3 Z1NC FOR BD901
	3011100030	NUT ISO HEX M3 Z1NC FOR IC306
	3011100030	NUT ISO HEX M3 Z1NC FOR Q308
	3340101525	BEAD PIN 1.5¢ L=25 FOR R943 X2
	3340236016	#BEAD PIN 16.5X2.36mm
	3340303400	TERMINAL TAB T=0.3mm
	36322TR001	TRANSISTER HOUSING FOR IC306
	36322TR001	TRANSISTER HOUSING FOR IC902
	36322TR001	TRANSISTER HOUSING FOR Q308
	36823TA103	WIRE HOLDER TA10-35
	4141123101	#P.C.B. MAIN
	41A2H00V02	FIRMWARE VERSION:V020 CHECK SU
	4692300001	CLIP-FUSE 5MM FOR F901
	5106122204	SPARK GAP 1.2KV AG-15 P:5mm -R
	5318201311	WIRE 1015 #18 BLK 120-5-5 FOR C-C',D-D'
	5322200601	WIRE UL1007 #22 BLK 50-5-5 FOR F-F',J-J'
	5322201034	WIRE UL1617 #22 BLK 90-TERMINA FOR E-E'
	5324113200	WIRE UL1007 #24 BRN 310-K-K FOR A-A'
	5324133500	WIRE UL1007 #24 ORG 340-K-K FOR B-B'
	5324141800	WIRE UL1007 #24 YEL 175-K-K FOR K-K'
	5520100004	INSULATOR SI-RUBBER TO-220 (W/ FOR Q103,601 (IRF740,IRF840, STP10NA40)
	5520100005	INSULATOR SI-RUBBER TO-3P FOR Q303
	5541025095	CABLE TIE 2.5X90 FOR P302 & 301 X3, CORE X2
	5560080001	CORE-FE (S-26X13.5X28) FOR FOCUS, G2 WIRE
	5560080003	CORE-FE 2643665802 FOR FOCUS, G2 WIRE
	8026113008	SCREW B/HD M3X8 TAPPING "B" FOR H/S & FBT COVER X4
	8026113008	SCREW B/HD M3X8 TAPPING "B" FOR PCB & FBT COVER X2
	8026113010	SCREW BIND(+) TAPPING M3X10 TR FOR IC201
	8128142608	SCREW B/H W/CAP "B" 2.6X8 TITE FOR CLIP WIRE & HEAT SINK
	8504113008	SCREW BIND(+) M3X8 MACH W/DISK FOR IC902
	8504113008	SCREW BIND(+) M3X8 MACH W/DISK FOR Q308
	8504113010	SCREW BIND(+) M3X10 MACH W/DIS FOR D110,304, Q103,105,303,601
	8504113010	SCREW BIND(+) M3X10 MACH W/DIS FOR IC306
	8504113012	SCREW BIND(+) M3X12 MACH W/DIS FOR BD901
	8504113016	SCREW BID(+) MACH W/D ZINC M3X16 FOR FQ902(TRS.FS10KM-12)
	9011294230	LABEL 28KV
	C459460B10	GND WIRE ASS'Y #18 FOR VIDEO SHIELD TO NECK SCREW
	C4609H2010	GND WIRE ASS'Y FOR I-I'
	C488101028	CONN. 11P & WIRE ASS'Y W/CORE FOR P301 & P303 TO P2,P3
BD901	4130400080	DIODE BRIDGE 4A/800V P:5.0MM
C101	5156339T50	CAP-EC6 3.3UFM 50V -RT-
C102	5092103615	CAP-PP .01UFG 100V P:10mm -SF-
C103	5156339T50	CAP-EC6 3.3UFM 50V -RT-
C104	5074104101	CAP-MEF 0.1UFK 100V -SF-
C105	5075224501	CAP-MEF 0.22UFJ 100V P:5.0mm -
C106	5116102111	CAP-MC 0.001UFK 100V -RT-
C107	5156101T25	CAP-EC6 100UFM 25V -RT-
C108	5156101T25	CAP-EC6 100UFM 25V -RT-
C109	5134104452	CAP-SCF 0.1UFZ 50V -RT-
C110	5156479T50	CAP-EC6 4.7UFM 50V -RT-
C112	5113474111	CAP-MC 0.47UFK 100V -SF-
C113	5128101552	CAP-CCSL 100PFJ 50V -RT-
C114	5192182573	CAP-MPP 1800PFJ 1.6KV P:15mm
C115	5190334583	CAP-MPP 0.33UFJ 250V -SF-

REF.	PART NO.	DESCRIPTION
C116	5156220S09	CAP-EC6 22UFM 350V -SF-
C117	5074473104	CAP-MEF 0.047UFK 400V P:10MM -
C119	5113224111	CAP-MC 0.22UFK 100V -SF-
C120	5092562562	CAP-PP 0.0056UFJ 630V P:10mm
C121	5156331T16	CAP-EC6 330UFM 16V -RT-
C122	5162479T50	CAP-NP 4.7UFM 50V RT 85C
C125	5074473104	CAP-MEF 0.047UFK 400V P:10MM -
C128	515X100S03	CAP-ECX 10UFM 250V -SF-
C130	5116104111	CAP-MC 0.1UFK 100V -RT-
C131	5074104104	CAP-MEF 0.1UFK 400V P:15MM -SF
C132	5156229T50	CAP-EC6 2.2UFM 50V -RT-
C133	5116104111	CAP-MC 0.1UFK 100V -RT-
C134	510H102132	CAP-CCR 1000PFK 1KV P:5mm -RT-
C135	5116102111	CAP-MC 0.001UFK 100V -RT-
C136	5156331T16	CAP-EC6 330UFM 16V -RT-
C150	5134104452	CAP-SCF 0.1UFZ 50V -RT-
C151	5134104452	CAP-SCF 0.1UFZ 50V -RT-
C152	5134104452	CAP-SCF 0.1UFZ 50V -RT-
C155	5134104452	CAP-SCF 0.1UFZ 50V -RT-
C156	5074153104	CAP-MEF 0.015UFK 400V P:10MM -
C201	5134104452	CAP-SCF 0.1UFZ 50V -RT-
C202	5156100T16	CAP-EC6 10UFM 16V -RT-
C203	5156101T16	CAP-EC6 100UFM 16V -RT-
C204	5156479T50	CAP-EC6 4.7UFM 50V -RT-
C205	5156109T50	CAP-EC6 1UFM 50V -RT-
C206	5156100T16	CAP-EC6 10UFM 16V -RT-
C207	5156100T16	CAP-EC6 10UFM 16V -RT-
C208	5156479T50	CAP-EC6 4.7UFM 50V -RT-
C209	515X102S25	CAP-ECX 1000UFM 25V -SF-
C210	515X221S35	CAP-ECX 220UFM 35V -SF-
C211	515X471S25	CAP-ECX 470UFM 25V -SF-
C212	5113224111	CAP-MC 0.22UFK 100V -SF-
C213	5116472111	CAP-MC 0.0047UFK 100V -RT-
C214	5113224111	CAP-MC 0.22UFK 100V -SF-
C215	5074104102	CAP-MEF 0.1UFK 250V P:10MM -SF
C216	515X471S16	CAP-ECX 470UFM 16V -SF-
C217	515X101T16	CAP-ECX 100UFM 16V -RT-
C218	5074474505	CAP-MP 0.47UFJ 50V P:5.0MM
C220	5116222111	CAP-MC 0.0022UFK 100V -RT-
C221	5134104452	CAP-SCF 0.1UFZ 50V -RT-
C222	5128681552	CAP-CCSL 680PFJ 50V -RT-
C223	5128331552	CAP-CCSL 330PFJ 50V -RT-
C224	5162109T50	CAP-NP 1UFM 50V RT 85C
C225	5116333111	CAP-MC 0.033UFK 100V -RT-
C226	5156229T50	CAP-EC6 2.2UFM 50V -RT-
C228	5156229T50	CAP-EC6 2.2UFM 50V -RT-
C230	5101102152	CAP-CCB 1000PFK 50V -RT-
C231	5116122111	CAP-MC 0.0012UFK 100V -RT-
C232	5116104111	CAP-MC 0.1UFK 100V -RT-
C234	5156100T16	CAP-EC6 10UFM 16V -RT-
C235	5156331T16	CAP-EC6 330UFM 16V -RT-
C301	5156471T16	CAP-EC6 470UFM 16V -RT-
C302	5156222S16	CAP-EC6 2200UFM 16V -SF-
C303	5134104452	CAP-SCF 0.1UFZ 50V -RT-
C304	5156109T50	CAP-EC6 1UFM 50V -RT-
C307	5116223111	CAP-MC 0.022UFK 100V -RT-
C308	5156101T16	CAP-EC6 100UFM 16V -RT-
C309	5134104452	CAP-SCF 0.1UFZ 50V -RT-
C311	5075102505	CAP-MEF 1000PFJ 50V CF
C312	5134104452	CAP-SCF 0.1UFZ 50V -RT-

REF.	PART NO.	DESCRIPTION
C313	5156221T25	CAP-EC6 220UFM 25V -RT-
C314	5156100T16	CAP-EC6 10UFM 16V -RT-
C315	5156470T50	CAP-EC6 47UFM 50V -RT-
C316	5195432573	CAP-PMHA 4300PFJ 1600V P:22.5
C319	5195204543	CAP-PMA 0.2UFJ 400V -SF-
C320	5190474583	CAP-MPP 0.47UFJ 250V -SF-
C321	5074224102	CAP-MEF 0.22UFK 250V P:15MM -S
C322	5190334543	CAP-MPP 0.33UFJ 400V P:22.5MM
C324	515E221S25	CAP-ECE 220UFM 25V -SF-
C325	5156101T25	CAP-EC6 100UFM 25V -RT-
C327	5116103111	CAP-MC 0.01UFK 100V -RT-
C332	5156100T16	CAP-EC6 10UFM 16V -RT-
C333	5156100T16	CAP-EC6 10UFM 16V -RT-
C334	5134104452	CAP-SCF 0.1UFZ 50V -RT-
C335	5156100T16	CAP-EC6 10UFM 16V -RT-
C336	5134104452	CAP-SCF 0.1UFZ 50V -RT-
C338	5156100T16	CAP-EC6 10UFM 16V -RT-
C339	5156100T16	CAP-EC6 10UFM 16V -RT-
C340	5156109T50	CAP-EC6 1UFM 50V -RT-
C341	5156100T16	CAP-EC6 10UFM 16V -RT-
C342	5116222111	CAP-MC 0.0022UFK 100V -RT-
C343	5116104111	CAP-MC 0.1UFK 100V -RT-
C344	5116472111	CAP-MC 0.0047UFK 100V -RT-
C345	5116104111	CAP-MC 0.1UFK 100V -RT-
C346	5074474505	CAP-MP 0.47UFJ 50V P:5.0MM
C347	5156100T16	CAP-EC6 10UFM 16V -RT-
C348	5156100T16	CAP-EC6 10UFM 16V -RT-
C349	5075474563	CAP-MEF 0.47UFJ 63V P:5.0mm -R
C350	5156100T50	CAP-EC6 10UFM 50V -RT-
C351	5121560552	CAP-CCCH 56PFJ 50V -RT-
C352	5116104111	CAP-MC 0.1UFK 100V -RT-
C353	5116104111	CAP-MC 0.1UFK 100V -RT-
C355	5134104452	CAP-SCF 0.1UFZ 50V -RT-
C360	5134104452	CAP-SCF 0.1UFZ 50V -RT-
C361	5134104452	CAP-SCF 0.1UFZ 50V -RT-
C362	5190154543	CAP-MPP 0.15UFJ 400V P:15MM -S
C363	5116104111	CAP-MC 0.1UFK 100V -RT-
C364	510H681132	CAP-CCH 680PFK 1KV -RT-
C365	5156100T16	CAP-EC6 10UFM 16V -RT-
C366	5134104452	CAP-SCF 0.1UFZ 50V -RT-
C367	5190724583	CAP-MPP 0.72UFJ 250V -SF-
C368	5134104452	CAP-SCF 0.1UFZ 50V -RT-
C369	5134104452	CAP-SCF 0.1UFZ 50V -RT-
C370	5116104111	CAP-MC 0.1UFK 100V -RT-
C371	5116104111	CAP-MC 0.1UFK 100V -RT-
C372	5116104111	CAP-MC 0.1UFK 100V -RT-
C380	5101222142	CAP-CCB 2200PFK 500V -RT-
C381	510H221193	CAP-CCR 220PFK 3KV P:7.5mm -SF
C382	5101101132	CAP-CCB 100PFK 1KV -RT-
C388	5156100T16	CAP-EC6 10UFM 16V -RT-
C389	5156470T25	CAP-EC6 47UFM 25V -RT-
C390	5156470T25	CAP-EC6 47UFM 25V -RT-
C391	5116104111	CAP-MC 0.1UFK 100V -RT-
C601	5156220S09	CAP-EC6 22UFM 350V -SF-
C604	5128101552	CAP-CCSL 100PFJ 50V -RT-
C605	5116222111	CAP-MC 0.0022UFK 100V -RT-
C606	5128681552	CAP-CCSL 680PFJ 50V -RT-
C607	5156100T50	CAP-EC6 10UFM 50V -RT-
C608	5116152150	CAP-MC 0.0015UFK 50V -RT-
C609	5116333111	CAP-MC 0.033UFK 100V -RT-

REF.	PART NO.	DESCRIPTION
C610	5156100T16	CAP-EC6 10UFM 16V -RT-
C612	5116104111	CAP-MC 0.1UFK 100V -RT-
C613	5134104452	CAP-SCF 0.1UFZ 50V -RT-
C614	5116103111	CAP-MC 0.01UFK 100V -RT-
C615	5156470T16	CAP-EC6 47UFM 16V -RT-
C801	5156109T50	CAP-EC6 1UFM 50V -RT-
C802	5134104452	CAP-SCF 0.1UFZ 50V -RT-
C803	5134104452	CAP-SCF 0.1UFZ 50V -RT-
C804	5156101T16	CAP-EC6 100UFM 16V -RT-
C805	5134104452	CAP-SCF 0.1UFZ 50V -RT-
C806	5128390552	CAP-CCSL 39PFJ 50V -RT-
C807	5128390552	CAP-CCSL 39PFJ 50V -RT-
C808	5134104452	CAP-SCF 0.1UFZ 50V -RT-
C809	5101102152	CAP-CCB 1000PFK 50V -RT-
C810	5128221552	CAP-CCSL 220PFJ 50V -RT-
C811	5128221552	CAP-CCSL 220PFJ 50V -RT-
C812	5128390552	CAP-CCSL 39PFJ 50V -RT-
C813	5128390552	CAP-CCSL 39PFJ 50V -RT-
C814	5134104452	CAP-SCF 0.1UFZ 50V -RT-
C815	5128101552	CAP-CCSL 100PFJ 50V -RT-
C816	5128101552	CAP-CCSL 100PFJ 50V -RT-
C817	5128681552	CAP-CCSL 680PFJ 50V -RT-
C818	5116102111	CAP-MC 0.001UFK 100V -RT-
C819	5116473111	CAP-MC 0.047UFK 100V -RT-
C820	5156109T50	CAP-EC6 1UFM 50V -RT-
C821	5156100T16	CAP-EC6 10UFM 16V -RT-
C822	5134104452	CAP-SCF 0.1UFZ 50V -RT-
C823	5156100T16	CAP-EC6 10UFM 16V -RT-
C824	5134104452	CAP-SCF 0.1UFZ 50V -RT-
C825	5156100T16	CAP-EC6 10UFM 16V -RT-
C826	5156100T16	CAP-EC6 10UFM 16V -RT-
C827	5128681552	CAP-CCSL 680PFJ 50V -RT-
C901	5061222440	CAP-CCS 2200PFM 400V -SF-
C902	5067224425	CAP-MPR 0.22UFM 250V -SF-
C903	5061472440	CAP-CCS 4700PFM 400V -SF-
C904	5061472440	CAP-CCS 4700PFM 400V -SF-
C905	5061103640	CAP-CCS 0.01UFZ 400V P:10MM -S
C906	5061103640	CAP-CCS 0.01UFZ 400V P:10MM -S
C907	515L331S04	CAP-ECL 330UFM 400V -SF-
C908	5074104104	CAP-MEF 0.1UFK 400V P:15MM -SF
C909	510H331132	CAP-CCH 330PFK 1KV P:5mm -RT-
C910	5156101T35	CAP-EC6 100UFM 35V -RT-
C911	5156220T01	CAP-EC6 22UFM 100V -RT-
C912	5092103615	CAP-PP .01UFG 100V P:10mm -SF-
C913	5101221152	CAP-CCB 220PFK 50V -RT-
C914	5101102152	CAP-CCB 1000PFK 50V -RT-
C915	5156109T50	CAP-EC6 1UFM 50V -RT-
C916	5061222440	CAP-CCS 2200PFM 400V -SF-
C917	5156331T16	CAP-EC6 330UFM 16V -RT-
C918	5134104452	CAP-SCF 0.1UFZ 50V -RT-
C919	5074104163	CAP-MEF 0.1UFK 63V -SF-
C920	5128331552	CAP-CCSL 330PFJ 50V -RT-
C921	5074104101	CAP-MEF 0.1UFK 100V -SF-
C922	5134104452	CAP-SCF 0.1UFZ 50V -RT-
C923	5156471S25	CAP-EC6 470UFM 25V -SF-
C924	5156471T16	CAP-EC6 470UFM 16V -RT-
C925	5156221S02	CAP-EC6 220UFM 160V -SF-
C926	5156221S07	CAP-EC6 220UFM 200V -SF-
C928	5156102S25	CAP-EC6 1000UFM 25V -SF-
C930	5156471T25	CAP-EC6 470UFM 25V -RT-

REF.	PART NO.	DESCRIPTION
C931	5134104452	CAP-SCF 0.1UFZ 50V -RT-
C932	5065104425	CAP-MPR 0.1UFM 250V -SF-
C936	5101332152	CAP-CCB 3300PFK 50V -RT-
C939	510H102132	CAP-CCR 1000PFK 1KV P:5mm -RT-
C942	5101102132	CAP-CCB 1000PFK 1KV -RT-
C943	5156339T50	CAP-EC6 3.3UFM 50V -RT-
C944	510H102132	CAP-CCR 1000PFK 1KV P:5mm -RT-
C945	5101102132	CAP-CCB 1000PFK 1KV -RT-
C948	5156471S25	CAP-EC6 470UFM 25V -SF-
C952	5156470T35	CAP-EC6 47UFM 35V -RT-
C955	515X471S16	CAP-ECX 470UFM 16V -SF-
C956	5075474563	CAP-MEF 0.47UFJ 63V P:5.0mm -R
D101	4120141480	DIODE 1N4148 (SI) -AT-
D102	4120141480	DIODE 1N4148 (SI) -AT-
D103	413010010B	DIODE RGP10B-5391 -AT-
D105	4120146060	DIODE 1N4606 (SI) -AT-
D107	4120141480	DIODE 1N4148 (SI) -AT-
D110	41305002F0	DIODE FMP-G2FS TO-220AB 1500V
D111	413020426C	DIODE 2.3A/600V BYM26C -AT-
D112	4130104004	DIODE UF4004 400V/1A -AT-
D113	413020426C	DIODE 2.3A/600V BYM26C -AT-
D114	4130010212	DIODE RGP02-12E 1200V/0.5A -AT
D120	413010010B	DIODE RGP10B-5391 -AT-
D121	4120141480	DIODE 1N4148 (SI) -AT-
D122	4120141480	DIODE 1N4148 (SI) -AT-
D123	413010010J	DIODE RGP10J-5390 1A 600V -AT-
D124	413010010J	DIODE RGP10J-5390 1A 600V -AT-
D125	4120141480	DIODE 1N4148 (SI) -AT-
D130	413010010J	DIODE RGP10J-5390 1A 600V -AT-
D201	4120141480	DIODE 1N4148 (SI) -AT-
D202	4120104001	DIODE 1N4001 -AT-
D204	4120141480	DIODE 1N4148 (SI) -AT-
D301	4120141480	DIODE 1N4148 (SI) -AT-
D302	413010010J	DIODE RGP10J-5390 1A 600V -AT-
D303	41301721Q6	DIODE 21DQ06 1.7A/60V -AT-
D304	4131014590	DIODE BY459F-1500 SOD-100
D305	4130100218	DIODE RGP02-18E-5300 -AT-
D306	413010010G	DIODE RGP10G-5390 -AT-
D307	4120141480	DIODE 1N4148 (SI) -AT-
D308	413010010G	DIODE RGP10G-5390 -AT-
D309	413010010G	DIODE RGP10G-5390 -AT-
D310	4130100218	DIODE RGP02-18E-5300 -AT-
D311	4120141480	DIODE 1N4148 (SI) -AT-
D312	4120104001	DIODE 1N4001 -AT-
D314	4120141480	DIODE 1N4148 (SI) -AT-
D317	413010010J	DIODE RGP10J-5390 1A 600V -AT-
D601	4120141480	DIODE 1N4148 (SI) -AT-
D602	41303031F4	DIODE 3A/400V 35NS 31DF4 -AT-
D603	4120141480	DIODE 1N4148 (SI) -AT-
D604	4120141480	DIODE 1N4148 (SI) -AT-
D605	4120141480	DIODE 1N4148 (SI) -AT-
D805	4120141480	DIODE 1N4148 (SI) -AT-
D806	4120141480	DIODE 1N4148 (SI) -AT-
D807	4120141480	DIODE 1N4148 (SI) -AT-
D808	4120141480	DIODE 1N4148 (SI) -AT-
D810	4120141480	DIODE 1N4148 (SI) -AT-
D812	4120141480	DIODE 1N4148 (SI) -AT-
D813	4120141480	DIODE 1N4148 (SI) -AT-
D814	4120141480	DIODE 1N4148 (SI) -AT-
D815	4120141480	DIODE 1N4148 (SI) -AT-

REF.	PART NO.	DESCRIPTION
D818	4120141480	DIODE 1N4148 (SI) -AT-
D905	413010426D	DIODE 1A/800V BYV26D
D906	413010426C	DIODE BYV26C KINK FORMING -AT-
D907	413010426C	DIODE BYV26C KINK FORMING -AT-
D908	413010001D	DIODE FE1D-5390
D909	4120141480	DIODE 1N4148 (SI) -AT-
D910	4120141480	DIODE 1N4148 (SI) -AT-
D911	4120141480	DIODE 1N4148 (SI) -AT-
D912	4120146060	DIODE 1N4606 (SI) -AT-
D913	4120141480	DIODE 1N4148 (SI) -AT-
D914	4120141480	DIODE 1N4148 (SI) -AT-
D915	41303031F4	DIODE 3A/400V 35NS 31DF4 -AT-
D916	41303031F4	DIODE 3A/400V 35NS 31DF4 -AT-
D918	41303031F2	DIODE 3A/200V 31DF2
D919	4130304311	DIODE 31DF1 -AT-
D920	41303031F2	DIODE 3A/200V 31DF2
D921	4120104001	DIODE 1N4001 -AT-
D922	4120141480	DIODE 1N4148 (SI) -AT-
D923	4120104001	DIODE 1N4001 -AT-
D924	4120104002	DIODE 1N4002 -AT-
D925	41303031F6	DIODE 31DF6
D926	41303031F6	DIODE 31DF6
D928	4120104001	DIODE 1N4001 -AT-
D930	41301011Q3	DIODE 11DQ03 -AT-
D931	4120141480	DIODE 1N4148 (SI) -AT-
DY	4490400207	CONN. 4P WAFER ROUND PIN
F901	5268400052	FUSE 4A/250VAC
FB101	4322209046	FERRITE BEAD 2UH -AT-
FB102	4322209046	FERRITE BEAD 2UH -AT-
FB103	4171024956	RES-MOF 1W J 2.4R -AT-
FB601	4322209046	FERRITE BEAD 2UH -AT-
FB602	4322209046	FERRITE BEAD 2UH -AT-
FB603	4322209046	FERRITE BEAD 2UH -AT-
FB801	4322209046	FERRITE BEAD 2UH -AT-
FB803	4322209046	FERRITE BEAD 2UH -AT-
FB804	4322209046	FERRITE BEAD 2UH -AT-
FB901	4322209046	FERRITE BEAD 2UH -AT-
FB902	4322209046	FERRITE BEAD 2UH -AT-
FB903	4322209046	FERRITE BEAD 2UH -AT-
FB906	4322309005	FERRITE BEAD 3uH
FB907	4322309005	FERRITE BEAD 3uH
FB908	4322309005	FERRITE BEAD 3uH
FB909	4322309006	FERRITE BEAD 3UH -AT-
FB910	4322309005	FERRITE BEAD 3uH
FB911	4322309006	FERRITE BEAD 3UH -AT-
IC101	4159594000	IC TL594CN 16PIN
IC201	4159817200	IC TDA8172 7PIN
IC301	4159129200	IC LM1292 28PIN
IC302	4159129500	IC LM1295 24PIN
IC306	4159317001	IC LM317T W/MOUNTING KIT-TO-22
IC320	4159358000	IC LM358N 8PIN
IC601	4159384300	IC UC3843A 8PIN
* IC801	4159687070	IC OTP MC68HC705BD7P
IC802	415924L160	IC 24LC16BP 8PIN DIP
IC803	4155743740	IC 74HC374 20PIN
IC805	4155074860	IC 74HC86 14PIN
IC806	4155074740	IC 74HC74 14PIN
IC807	41591406H0	IC UPC1406HA 9PIN
IC901	4159384200	IC UC3842A 8PIN
IC902	4159780501	IC 7805 REGULATOR 3PIN

REF.	PART NO.	DESCRIPTION
IC903	415943100C	#IC AS431C REGULATOR TO-92 -RT
J207	4322309006	FERRITE BEAD 3UH -AT-
J222	4322309006	FERRITE BEAD 3UH -AT-
L101	4321829006	COIL PEAKING 8.2UH -AT-
L103	4321151006	COIL PEAKING 150UH -AT-
L303	4323451003	COIL CHOKE 450uH +-10%
L304	708S259H10	COIL LINEARITY 20 1/2 +-10%
L305	4323750103	COIL CHOKE 75UH -SF-
L306	4323809503	COIL CHOKE 8mH
L307	4321151006	COIL PEAKING 150UH -AT-
L308	4321121006	COIL PEAKING 120uH -AT-
L601	432A151006	COIL PEAKING 150uH SMALL -AT-
L901	4321330006	COIL PEAKING 33UH -AT-
P302	4490300140	CONN. 3P 2.5mm B-EA-A WAFER
P804	4491000260	CONN. 10P WAFER TYPE:1-173981-
P902	4490300190	CONN. 3.96 3P W/O PIN 2 -SF-
P903	4490200207	CONN. 2P WAFER ROUND PIN 10MM
PH901	4159435002	POTO COUPLER X'STER 4N35 W=10
PTCR	7021174230	PTCR 14R
Q101	411022120Y	TRS. 2SC2120Y TO-92 -RT-
Q102	4110009660	TRS. 2SA966 TPE6 TO-92M -RT-
Q103	4105907400	TRS. IRF740
Q104	4105906200	TRS. MOSFET IRF620 TO-220
Q105	4100251240	TRS. 2SC5124 TO-3P
Q106	4100227520	TRS. 2SC2752-K TO-126
Q107	4116612030	TRS. RN1203 -RT-
Q108	4110007330	TRS. 2SA733 TO-92M -RT-
Q109	410030669A	TRS. 2SD669AWC TO-126
Q110	4110007330	TRS. 2SA733 TO-92M -RT-
Q111	4112409200	TRS. KSP92 TO-92
Q112	4116610010	TRS. RN1001 -RT-
Q113	4110007330	TRS. 2SA733 TO-92M -RT-
Q114	410030669A	TRS. 2SD669AWC TO-126
Q202	411030667C	TRS. 2SD667C TO-92M -RT-
Q203	411020945P	TRS. 2SC945P TO-92 -RT-
Q204	411020945P	TRS. 2SC945P TO-92 -RT-
Q205	411020945P	TRS. 2SC945P TO-92 -RT-
Q206	411020945P	TRS. 2SC945P TO-92 -RT-
Q207	4116612030	TRS. RN1203 -RT-
Q301	4116612030	TRS. RN1203 -RT-
Q302	4105906200	TRS. MOSFET IRF620 TO-220
Q303	4100253310	TRS. 2SC5331 TO-3P 1500V/15A
Q304	4110009660	TRS. 2SA966 TPE6 TO-92M -RT-
Q305	411022655Y	TRS. 2SC2655-Y TO-92M -RT-
Q306	411020945P	TRS. 2SC945P TO-92 -RT-
Q307	41035020U0	TRS. FS20UM-5 TO-220AB 250V/20
Q308	410031264A	TRS. 2SD1264A
Q309	4116612030	TRS. RN1203 -RT-
Q311	411020945P	TRS. 2SC945P TO-92 -RT-
Q312	4110009660	TRS. 2SA966 TPE6 TO-92M -RT-
Q320	4116612030	TRS. RN1203 -RT-
Q330	41035020U0	TRS. FS20UM-5 TO-220AB 250V/20
Q331	4116612030	TRS. RN1203 -RT-
Q332	4116612030	TRS. RN1203 -RT-
Q333	41035020U0	TRS. FS20UM-5 TO-220AB 250V/20
Q340	410030669A	TRS. 2SD669AWC TO-126
Q341	411010647C	TRS. 2SB647C TO-92M -RT-
Q601	4105908400	TRS. IRF840 TO-220
Q602	4110007330	TRS. 2SA733 TO-92M -RT-
Q603	4111139040	TRS. 2N3904 TO-92 -RT-

REF.	PART NO.	DESCRIPTION
Q604	411020945P	TRS. 2SC945P TO-92 -RT-
Q605	4111139060	TRS. 2N3906 TO-92 -RT-
Q606	4116612030	TRS. RN1203 -RT-
Q608	4116612030	TRS. RN1203 -RT-
Q801	411020945P	TRS. 2SC945P TO-92 -RT-
Q802	411020945P	TRS. 2SC945P TO-92 -RT-
Q803	411020945P	TRS. 2SC945P TO-92 -RT-
Q804	411020945P	TRS. 2SC945P TO-92 -RT-
Q901	410030669A	TRS. 2SD669AWC TO-126
Q902	41035010K0	TRS. FS10KM-12 TO-220F
Q903	4114501006	TRS. MCR100-6 TO-92 -RT-
Q904	4110105610	TRS. 2SB561 TO-92 -RT-
Q905	4116612030	TRS. RN1203 -RT-
Q906	4103200122	TRS. TIP122 TO-220
Q915	411020945P	TRS. 2SC945P TO-92 -RT-
R101	4050533255	RES-CF 1/4W J 3.3K -AT- SMALL
R102	4050568255	RES-CF 1/4W J 6.8K SMALL -AT-
R103	4257045492	RES-PR MF 1/4W F 54.9K SMALL -
R104	4050551255	RES-CF 1/4W J 5.1K -AT- SMALL
R105	4050510355	RES-CF 1/4W J 10K -AT- SMALL
R106	4050551255	RES-CF 1/4W J 5.1K -AT- SMALL
R107	4050510255	RES-CF 1/4W J 1K -AT- SMALL
R108	4050533255	RES-CF 1/4W J 3.3K -AT- SMALL
R109	4050510455	RES-CF 1/4W J 100K -AT- SMALL
R110	4050524055	RES-CF 1/4W J 24R SMALL -AT-
R111	4050520255	RES-CF 1/4W J 2K -AT- SMALL
R112	4050510155	RES-CF 1/4W J 100R -AT- SMALL
R114	4050547255	RES-CF 1/4W J 4.7K -AT- SMALL
R115	4172047053	RES-MOF 2W J 47R -SF-
R116	4171033953	RES-MOF 1W J 3.3R -SF-
R117	4050110155	RES-CF 1/2W J 100R SMALL -AT-
R118	4050116455	RES-CF 1/2W J 160K SMALL -AT-
R119	4050543455	RES-CF 1/4W J 430K SMALL -AT-
R120	4050543455	RES-CF 1/4W J 430K SMALL -AT-
R121	4050533255	RES-CF 1/4W J 3.3K -AT- SMALL
R122	4050568455	RES-CF 1/4W J 680K SMALL -AT-
R123	4050510055	RES-CF 1/4W J 10R -AT- SMALL
R125	4050547155	RES-CF 1/4W J 470R SMALL -AT-
R128	4050582155	RES-CF 1/4W J 820R -AT- SMALL
R129	4171075953	RES-MOF 1W J 7.5R -SF-
R130	4050547255	RES-CF 1/4W J 4.7K -AT- SMALL
R131	4050510355	RES-CF 1/4W J 10K -AT- SMALL
R132	4050522555	RES-CF 1/4W J 2.2M SMALL -AT-
R133	4050511355	RES-CF 1/4W J 11K SMALL -AT-
R134	4050510255	RES-CF 1/4W J 1K -AT- SMALL
R136	4050510355	RES-CF 1/4W J 10K -AT- SMALL
R138	4050512455	RES-CF 1/4W J 120K -AT- SMALL
R140	4050510255	RES-CF 1/4W J 1K -AT- SMALL
R141	4050510255	RES-CF 1/4W J 1K -AT- SMALL
R145	4050511355	RES-CF 1/4W J 11K SMALL -AT-
R146	4050510355	RES-CF 1/4W J 10K -AT- SMALL
R148	4050127355	RES-CF 1/2W J 27K SMALL -AT-
R149	4050515355	RES-CF 1/4W J 15K -AT- SMALL
R151	4050133155	RES-CF 1/2W J 330R -AT- SMALL
R152	4050510255	RES-CF 1/4W J 1K -AT- SMALL
R153	4050510255	RES-CF 1/4W J 1K -AT- SMALL
R156	4050510455	RES-CF 1/4W J 100K -AT- SMALL
R157	4050510255	RES-CF 1/4W J 1K -AT- SMALL
R201	4050556255	RES-CF 1/4W J 5.6K -AT- SMALL
R202	4050512355	RES-CF 1/4W J 12K -AT- SMALL

REF.	PART NO.	DESCRIPTION
R203	4050510355	RES-CF 1/4W J 10K -AT- SMALL
R204	4050575455	RES-CF 1/4W J 750K SMALL -AT-
R205	4050513355	RES-CF 1/4W J 13K SMALL -AT-
R206	4050510255	RES-CF 1/4W J 1K -AT- SMALL
R207	4050520455	RES-CF 1/4W J 200K -AT- SMALL
R210	4050510355	RES-CF 1/4W J 10K -AT- SMALL
R211	4050510455	RES-CF 1/4W J 100K -AT- SMALL
R212	4050536355	RES-CF 1/4W J 36K -AT- SMALL
R213	4257044322	RES-PR MF 1/4W F 43.2K AT SMAL
R214	4257041504	RES-PR MF 1/4W F 1.5M SMALL -A
R215	4050512455	RES-CF 1/4W J 120K -AT- SMALL
R216	4257048251	RES-PR MF 1/4W F 8.25K AT SMAL
R218	4050530455	RES-CF 1/4W J 300K SMALL -AT-
R219	4257043922	RES-PR MF 1/4W F 39.2K AT SMAL
R220	4050512955	RES-CF 1/4W J 1.2R SMALL -AT-
R221	4050122155	RES-CF 1/2W J 220R -AT- SMALL
R222	4257049532	RES-PR MF 1/4W F 95.3K AT SMAL
R223	4171015953	RES-MOF 1W J 1.5R -SF-
R224	4257041432	RES-PR MF 1/4W F 14.3K SMALL -
R225	4050547255	RES-CF 1/4W J 4.7K -AT- SMALL
R226	4050110255	RES-CF 1/2W J 1K SMALL -AT-
R227	4050510355	RES-CF 1/4W J 10K -AT- SMALL
R228	4050122255	RES-CF 1/2W J 2.2K SMALL -AT-
R229	4050510055	RES-CF 1/4W J 10R -AT- SMALL
R230	4172010953	RES-MOF 2W J 1R -SF-
R231	4050547155	RES-CF 1/4W J 470R SMALL -AT-
R232	4050510355	RES-CF 1/4W J 10K -AT- SMALL
R233	4050510255	RES-CF 1/4W J 1K -AT- SMALL
R234	4050568355	RES-CF 1/4W J 68K -AT- SMALL
R235	4257047152	RES-PR MF 1/4W F 71.5K SMALL -
R236	4257041432	RES-PR MF 1/4W F 14.3K SMALL -
R237	4050510355	RES-CF 1/4W J 10K -AT- SMALL
R238	4050551255	RES-CF 1/4W J 5.1K -AT- SMALL
R240	4050536355	RES-CF 1/4W J 36K -AT- SMALL
R241	4050510355	RES-CF 1/4W J 10K -AT- SMALL
R242	4050510355	RES-CF 1/4W J 10K -AT- SMALL
R243	4050512355	RES-CF 1/4W J 12K -AT- SMALL
R244	4050510355	RES-CF 1/4W J 10K -AT- SMALL
R245	4257047502	RES-PR MF 1/4W F 75K SMALL -AT
R246	4050539355	RES-CF 1/4W J 39K SMALL -AT-
R301	4257041582	RES-PR MF 1/4W F 15.8K AT SMAL
R302	4257042742	RES-PR MF 1/4W F 27.4K SMALL -
R305	4050510155	RES-CF 1/4W J 100R -AT- SMALL
R306	4050520255	RES-CF 1/4W J 2K -AT- SMALL
R310	4050533155	RES-CF 1/4W J 330R SMALL -AT-
R311	4050510355	RES-CF 1/4W J 10K -AT- SMALL
R312	4257041102	RES-PR MF 1/4W F 11K AT SMALL
R313	4050518355	RES-CF 1/4W J 18K SMALL -AT-
R315	4050510455	RES-CF 1/4W J 100K -AT- SMALL
R316	4050510155	RES-CF 1/4W J 100R -AT- SMALL
R317	4171024156	RES-MOF 1W J 240R -AT-
R318	4172047053	RES-MOF 2W J 47R -SF-
R320	4172015953	RES-MOF 2W J 1.5R -SF-
R323	4257041502	RES-PR MF 1/4W F 15K AT SMALL
R324	4257046191	RES-PR MF 1/4W F 6.19K SMALL -
R325	4050510355	RES-CF 1/4W J 10K -AT- SMALL
R326	4257043651	RES-PR MF 1/4W F 3.65K AT SMAL
R327	4050522255	RES-CF 1/4W J 2.2K -AT- SMALL
R328	4257044320	RES-PR MF 1/4W F 432R SMALL -A
R329	4257042432	RES-PR MF 1/4W F 24.3K SMALL -

REF.	PART NO.	DESCRIPTION
R330	4182016153	RES-FUSIBLE 2W J 160R -SF-
R331	4257041004	RES-PR MF 1/4W F 1M SMALL -AT-
R332	4050547355	RES-CF 1/4W J 47K -AT- SMALL
R334	4172075853	RES-MOF 2W J 0.75R -SF-
R335	4050510255	RES-CF 1/4W J 1K -AT- SMALL
R336	4171010456	RES-MOF 1W J 100K -AT-
R337	4257041302	RES-PR MF 1/4W F 13K AT SMALL
R342	4050547355	RES-CF 1/4W J 47K -AT- SMALL
R346	4050551255	RES-CF 1/4W J 5.1K -AT- SMALL
R348	4050547255	RES-CF 1/4W J 4.7K -AT- SMALL
R349	4050510255	RES-CF 1/4W J 1K -AT- SMALL
R350	4050547255	RES-CF 1/4W J 4.7K -AT- SMALL
R351	4050510255	RES-CF 1/4W J 1K -AT- SMALL
R353	4050515255	RES-CF 1/4W J 1.5K SMALL -AT-
R354	4050510355	RES-CF 1/4W J 10K -AT- SMALL
R356	4050510355	RES-CF 1/4W J 10K -AT- SMALL
R357	4050510355	RES-CF 1/4W J 10K -AT- SMALL
R358	4050522155	RES-CF 1/4W J 220R SMALL -AT-
R359	4050510555	RES-CF 1/4W J 1M -AT- SMALL
R360	4050515355	RES-CF 1/4W J 15K -AT- SMALL
R361	4050568255	RES-CF 1/4W J 6.8K SMALL -AT-
R362	4050547255	RES-CF 1/4W J 4.7K -AT- SMALL
R363	4050510455	RES-CF 1/4W J 100K -AT- SMALL
R364	4050520355	RES-CF 1/4W J 20K -AT- SMALL
R366	4050510355	RES-CF 1/4W J 10K -AT- SMALL
R367	4257041002	RES-PR MF 1/4W F 10K AT SMALL
R368	4050510355	RES-CF 1/4W J 10K -AT- SMALL
R369	4257041002	RES-PR MF 1/4W F 10K AT SMALL
R370	4050510355	RES-CF 1/4W J 10K -AT- SMALL
R371	4050510155	RES-CF 1/4W J 100R -AT- SMALL
R380	4050522255	RES-CF 1/4W J 2.2K -AT- SMALL
R383	4050110455	RES-CF 1/2W J 100K SMALL -AT-
R384	4050522255	RES-CF 1/4W J 2.2K -AT- SMALL
R385	4050110455	RES-CF 1/2W J 100K SMALL -AT-
R386	4050522255	RES-CF 1/4W J 2.2K -AT- SMALL
R387	4050147455	RES-CF 1/2W J 470K -AT- SMALL
R388	4050110455	RES-CF 1/2W J 100K SMALL -AT-
R389	4257042153	RES-PR MF 1/4W F 215K SMALL -A
R390	4050520355	RES-CF 1/4W J 20K -AT- SMALL
R391	4050516455	RES-CF 1/4W J 160K SMALL -AT-
R392	4050516455	RES-CF 1/4W J 160K SMALL -AT-
R393	4050510155	RES-CF 1/4W J 100R -AT- SMALL
R394	4177351053	RES-MOF 3W J 51R -SF- SMALL
R395	4050133155	RES-CF 1/2W J 330R -AT- SMALL
R396	4172030353	RES-MOF 2W J 30K SMALL -SF-
R397	4172030353	RES-MOF 2W J 30K SMALL -SF-
R398	4050510355	RES-CF 1/4W J 10K -AT- SMALL
R399	4050515355	RES-CF 1/4W J 15K -AT- SMALL
R3A0	4172015953	RES-MOF 2W J 1.5R -SF-
R3A1	4050510355	RES-CF 1/4W J 10K -AT- SMALL
R3A2	4171022056	RES-MOF 1W J 22R -AT-
R3A3	4257043011	RES-PR MF 1/4W F 3.01K SMALL -
R3A4	4050510455	RES-CF 1/4W J 100K -AT- SMALL
R3A5	4050510455	RES-CF 1/4W J 100K -AT- SMALL
R3A6	4050510155	RES-CF 1/4W J 100R -AT- SMALL
R3A7	4257043011	RES-PR MF 1/4W F 3.01K SMALL -
R3A8	4050510155	RES-CF 1/4W J 100R -AT- SMALL
R3A9	4257043922	RES-PR MF 1/4W F 39.2K AT SMAL
R3B3	4050568255	RES-CF 1/4W J 6.8K SMALL -AT-
R3B4	4050547255	RES-CF 1/4W J 4.7K -AT- SMALL

REF.	PART NO.	DESCRIPTION
R3B5	4257041002	RES-PR MF 1/4W F 10K AT SMALL
R3B6	4257041911	RES-PR MF 1/4W F 1.91K AT SMAL
R3B7	4257047501	RES-PR MF 1/4W F 7.5K AT SMALL
R3B8	4257047152	RES-PR MF 1/4W F 71.5K SMALL -
R3B9	4050533255	RES-CF 1/4W J 3.3K -AT- SMALL
R3C2	4172056053	RES-MOF 2W J 56R -SF-
R3C3	4172015153	RES-MOF 2W J 150R -SF-
R601	4050510055	RES-CF 1/4W J 10R -AT- SMALL
R602	4050515255	RES-CF 1/4W J 1.5K SMALL -AT-
R603	4050510355	RES-CF 1/4W J 10K -AT- SMALL
R604	4050510355	RES-CF 1/4W J 10K -AT- SMALL
R605	4050522255	RES-CF 1/4W J 2.2K -AT- SMALL
R606	4050539255	RES-CF 1/4W J 3.9K -AT- SMALL
R607	4050536355	RES-CF 1/4W J 36K -AT- SMALL
R608	4050551355	RES-CF 1/4W J 51K -AT- SMALL
R609	4257043572	RES-PR MF 1/4W F 35.7K AT SMAL
R610	4257041822	RES-PR MF 1/4W F 18.2K SMALL -
R611	4050568255	RES-CF 1/4W J 6.8K SMALL -AT-
R612	4050510355	RES-CF 1/4W J 10K -AT- SMALL
R613	4050510255	RES-CF 1/4W J 1K -AT- SMALL
R614	4050547355	RES-CF 1/4W J 47K -AT- SMALL
R615	4050522255	RES-CF 1/4W J 2.2K -AT- SMALL
R616	4050182055	RES-CF 1/2W J 82R SMALL -AT-
R617	4050510055	RES-CF 1/4W J 10R -AT- SMALL
R618	4050510355	RES-CF 1/4W J 10K -AT- SMALL
R619	4050168155	RES-CF 1/2W J 680R -AT- SMALL
R620	4050547155	RES-CF 1/4W J 470R SMALL -AT-
R621	4050551255	RES-CF 1/4W J 5.1K -AT- SMALL
R801	4050551055	RES-CF 1/4W J 51R -AT- SMALL
R802	4050547255	RES-CF 1/4W J 4.7K -AT- SMALL
R803	4050547255	RES-CF 1/4W J 4.7K -AT- SMALL
R804	4050510155	RES-CF 1/4W J 100R -AT- SMALL
R805	4050510355	RES-CF 1/4W J 10K -AT- SMALL
R806	4050547255	RES-CF 1/4W J 4.7K -AT- SMALL
R807	4050547155	RES-CF 1/4W J 470R SMALL -AT-
R808	4050520255	RES-CF 1/4W J 2K -AT- SMALL
R809	4050547255	RES-CF 1/4W J 4.7K -AT- SMALL
R810	4050547255	RES-CF 1/4W J 4.7K -AT- SMALL
R811	4050547255	RES-CF 1/4W J 4.7K -AT- SMALL
R812	4050547255	RES-CF 1/4W J 4.7K -AT- SMALL
R813	4050510255	RES-CF 1/4W J 1K -AT- SMALL
R814	4050510355	RES-CF 1/4W J 10K -AT- SMALL
R816	4050510155	RES-CF 1/4W J 100R -AT- SMALL
R817	4050510155	RES-CF 1/4W J 100R -AT- SMALL
R818	4050547255	RES-CF 1/4W J 4.7K -AT- SMALL
R819	4050510455	RES-CF 1/4W J 100K -AT- SMALL
R820	4050510455	RES-CF 1/4W J 100K -AT- SMALL
R821	4050510255	RES-CF 1/4W J 1K -AT- SMALL
R822	4050575155	RES-CF 1/4W J 750R SMALL -AT-
R823	4050575155	RES-CF 1/4W J 750R SMALL -AT-
R824	4050510355	RES-CF 1/4W J 10K -AT- SMALL
R825	4050510355	RES-CF 1/4W J 10K -AT- SMALL
R826	4050510255	RES-CF 1/4W J 1K -AT- SMALL
R827	4050522255	RES-CF 1/4W J 2.2K -AT- SMALL
R828	4050510255	RES-CF 1/4W J 1K -AT- SMALL
R829	4050547255	RES-CF 1/4W J 4.7K -AT- SMALL
R830	4050547255	RES-CF 1/4W J 4.7K -AT- SMALL
R831	4050510155	RES-CF 1/4W J 100R -AT- SMALL
R832	4050510355	RES-CF 1/4W J 10K -AT- SMALL
R833	4050510355	RES-CF 1/4W J 10K -AT- SMALL

REF.	PART NO.	DESCRIPTION
R834	4050510355	RES-CF 1/4W J 10K -AT- SMALL
R835	4050510455	RES-CF 1/4W J 100K -AT- SMALL
R836	4050510555	RES-CF 1/4W J 1M -AT- SMALL
R837	4050515255	RES-CF 1/4W J 1.5K SMALL -AT-
R838	4050510355	RES-CF 1/4W J 10K -AT- SMALL
R901	710501003B	THMER. +-15% 10R 5A 15¢ W/KINK
R902	4171033856	RES-MOF 1W J 0.33R -AT-
R903	4172036353	RES-MOF 2W J 36K -SF-
R904	4172036353	RES-MOF 2W J 36K -SF-
R905	409501035E	RES-WW 5W J 10K
R906	409702025H	RES-WW 7W J 2K
R907	4050124355	RES-CF 1/2W J 24K -AT- SMALL
R909	4050527255	RES-CF 1/4W J 2.7K -AT- SMALL
R910	4050518055	RES-CF 1/4W J 18R -AT- SMALL
R911	4050539055	RES-CF 1/4W J 39R -AT- SMALL
R912	4257045761	RES-PR MF 1/4W F 5.76K SMALL -
R914	4172033853	RES-MOF 2W J 0.33R -SF-
R915	4050524255	RES-CF 1/4W J 2.4K SMALL -AT-
R916	4050518255	RES-CF 1/4W J 1.8K -AT- SMALL
R918	4050515355	RES-CF 1/4W J 15K -AT- SMALL
R920	4050510255	RES-CF 1/4W J 1K -AT- SMALL
R921	4050551255	RES-CF 1/4W J 5.1K -AT- SMALL
R922	4050551255	RES-CF 1/4W J 5.1K -AT- SMALL
R923	4050524055	RES-CF 1/4W J 24R SMALL -AT-
R924	4050520155	RES-CF 1/4W J 200R -AT- SMALL
R925	4050513155	RES-CF 1/4W J 130R SMALL -AT-
R926	4050551255	RES-CF 1/4W J 5.1K -AT- SMALL
R927	4050510355	RES-CF 1/4W J 10K -AT- SMALL
R928	4050513355	RES-CF 1/4W J 13K SMALL -AT-
R929	4050515355	RES-CF 1/4W J 15K -AT- SMALL
R930	4050510355	RES-CF 1/4W J 10K -AT- SMALL
R931	4050510155	RES-CF 1/4W J 100R -AT- SMALL
R932	4050522155	RES-CF 1/4W J 220R SMALL -AT-
R933	4050510155	RES-CF 1/4W J 100R -AT- SMALL
R934	4050547155	RES-CF 1/4W J 470R SMALL -AT-
R935	4050536155	RES-CF 1/4W J 360R SMALL -AT-
R936	4050547155	RES-CF 1/4W J 470R SMALL -AT-
R937	4257048872	RES-PR MF 1/4W F 88.7K SMALL -
R938	4050510255	RES-CF 1/4W J 1K -AT- SMALL
R939	4257042002	RES-PR MF 1/4W F 20K AT SMALL
R940	4257043481	RES-PR MF 1/4W F 3.48K SMALL -
* R941	4257042003	RES-PR MF 1/4W F 200K AT SMALL
R942	4050551255	RES-CF 1/4W J 5.1K -AT- SMALL
R943	4172047355	RES-MOF 2W J 47K -IB-
R950	4181024953	RES-FUSIBLE 1W J 2.4R -SF-
R953	4050151055	RES-CF 1/2W J 51R -AT- SMALL
R955	4050562055	RES-CF 1/4W J 62R SMALL -AT-
R956	4050182455	RES-CF 1/2W J 820K SMALL -AT-
R957	4050515555	RES-CF 1/4W J 1.5M SMALL -AT-
R958	4050510255	RES-CF 1/4W J 1K -AT- SMALL
R959	4050156555	RES-CF 1/2W J 5.6M SMALL -AT-
R960	4050551055	RES-CF 1/4W J 51R -AT- SMALL
R961	4050151055	RES-CF 1/2W J 51R -AT- SMALL
R962	4171051056	RES-MOF 1W J 51R -AT-
R963	4172018053	RES-MOF 2W J 18R -SF-
R964	4050515555	RES-CF 1/4W J 1.5M SMALL -AT-
R977	4050556555	RES-CF 1/4W J 5.6M SMALL -AT-
R978	4050520355	RES-CF 1/4W J 20K -AT- SMALL
R979	4050510355	RES-CF 1/4W J 10K -AT- SMALL
RL301	4420812005	RELAY JW 2HN-DC12V

REF.	PART NO.	DESCRIPTION
RL901	4420412009	RELAY JW2aHN-DC12V
RN801	4082074725	RES-NET 7P J 4.7K COMMON
RN802	4082094725	RES-NET 9P J 4.7K COMMON
RN803	4082074725	RES-NET 7P J 4.7K COMMON
SW301	4410803000	SWITCH LEVER KFC1301
SW302	4410803000	SWITCH LEVER KFC1301
T101	7050257H10	DRIVER TRANSFORMER
T102	7050917T10	O/P TRANSFORMER
T103	7050309H10	#F.B.T.
T104	7050502H20	FOCUS TRANSFORMER
T301	7050209H10	DRIVER TRANSFORMER
T601	7177H10000	TRANSDUCER CURRENT SENSOR
T602	7050957H10	H-TRANSFORMER (O/P)
T603	705025423L	DRIVER TRANSFORMER
T902	7051309H10	#PFC CHOKE
T903	7050102H20	POWER TRANSFORMER
VR101	5225150310	POT(CERMET) 0.3W 50K 6¢ LAY-DO
VR102	5221150300	POT(CERMET) 0.3W 50K 6¢ STAND-
VR106	5225150310	POT(CERMET) 0.3W 50K 6¢ LAY-DO
X801	7154000005	CRYSTAL 4.00MHz
ZD101	4120510160	Z-D Z10-160B 1W 160V +-5% DO-4
ZD302	41205091CU	DIODE ZENER MTZJ9.1C -AT-
ZD336	4120500152	DIODE ZENER 14.5-15.1V -AT-
ZD370	4120500152	DIODE ZENER 14.5-15.1V -AT-
ZD387	4120500152	DIODE ZENER 14.5-15.1V -AT-
ZD601	4120500152	DIODE ZENER 14.5-15.1V -AT-
ZD602	41205006C1	DIODE ZENER 6.1V HZ6C-1 -AT-
ZD801	41205003C2	DIODE ZENER HZ3C2 -AT-
ZD802	41205051AU	DIODE ZENER MTZJ5.1A -AT-
ZD901	41205018CU	DIODE ZENER MTZJ18C -AT-
ZD902	41205018CU	DIODE ZENER MTZJ18C -AT-
ZD903	4120502002	DIODE ZENER HZ20-2 1/2W 20V -A
ZD904	4120501202	DIODE ZENER 1/2W 12V HZ12A1 -A

9.3. Neck Board

REF.	PART NO.	DESCRIPTION
*	UT9H200244 -V	NECK PCB ASS'Y
	2008197L10	#HEAT SINK FOR IC1
	4141123500	#P.C.B. VIDEO
	8026153008	SCREW B/HD M3X8 TAPPING "B" FOR HEAT SINK & NECK PCB X4
	8504113008	SCREW BIND(+) M3X8 MACH W/DISK FOR IC1
C1	5075104501	CAP-MEF 0.1UFJ 100V CF
C10	515X100T50	CAP-ECX 10UFM 50V -RT-
C11	5134104452	CAP-SCF 0.1UFZ 50V -RT-
C12	515X109T50	CAP-ECX 1UFM 50V -RT-
C13	5156101T16	CAP-EC6 100UFM 16V -RT-
C14	5134104452	CAP-SCF 0.1UFZ 50V -RT-
C15	5134104452	CAP-SCF 0.1UFZ 50V -RT-
C16	7140104214	CAP-X7R 0.1UFM 100V -RT-
C17	515X100T01	CAP-ECX 10UFM 100V -RT-
C18	515X470S01	CAP-ECX 47UFM 100V -SF-
C19	5134104452	CAP-SCF 0.1UFZ 50V -RT-
C2	7140104214	CAP-X7R 0.1UFM 100V -RT-
C20	5134104452	CAP-SCF 0.1UFZ 50V -RT-
C21	5134104452	CAP-SCF 0.1UFZ 50V -RT-

	REF.	PART NO.	DESCRIPTION
	C22	5134104452	CAP-SCF 0.1UFZ 50V -RT-
	C23	5156101T16	CAP-EC6 100UFM 16V -RT-
	C24	5134104452	CAP-SCF 0.1UFZ 50V -RT-
	C25	5116472111	CAP-MC 0.0047UFK 100V -RT-
	C26	5156109T50	CAP-EC6 1UFM 50V -RT-
	C27	5134104452	CAP-SCF 0.1UFZ 50V -RT-
	C28	5156101T16	CAP-EC6 100UFM 16V -RT-
	C29	5134104452	CAP-SCF 0.1UFZ 50V -RT-
	C3	5075104501	CAP-MEF 0.1UFJ 100V CF
	C30	5134104452	CAP-SCF 0.1UFZ 50V -RT-
	C31	5134104452	CAP-SCF 0.1UFZ 50V -RT-
	C32	5134104452	CAP-SCF 0.1UFZ 50V -RT-
	C33	5156100T50	CAP-EC6 10UFM 50V -RT-
*	C34	5156100T50	CAP-EC6 10UFM 50V -RT-
	C35	5156100T50	CAP-EC6 10UFM 50V -RT-
	C36	5156100T50	CAP-EC6 10UFM 50V -RT-
	C37	5156109T50	CAP-EC6 1UFM 50V -RT-
	C38	5134104452	CAP-SCF 0.1UFZ 50V -RT-
	C39	5121101552	CAP-CCCH 100PFJ 50V -RT-
	C4	5075104501	CAP-MEF 0.1UFJ 100V CF
	C40	5134104452	CAP-SCF 0.1UFZ 50V -RT-
	C41	5101222152	CAP-CCB 2200PFK 50V -RT-
	C42	5128221552	CAP-CCSL 220PFJ 50V -RT-
	C43	7140104214	CAP-X7R 0.1UFM 100V -RT-
	C44	7140104214	CAP-X7R 0.1UFM 100V -RT-
	C45	5134104452	CAP-SCF 0.1UFZ 50V -RT-
	C46	5156221T16	CAP-EC6 220UFM 16V -RT-
	C47	5134104452	CAP-SCF 0.1UFZ 50V -RT-
	C48	5134104452	CAP-SCF 0.1UFZ 50V -RT-
	C49	7140104214	CAP-X7R 0.1UFM 100V -RT-
	C5	7140104214	CAP-X7R 0.1UFM 100V -RT-
*	C54	5156109T50	CAP-EC6 1UFM 50V -RT-
	C55	5134104452	CAP-SCF 0.1UFZ 50V -RT-
	C56	5134104452	CAP-SCF 0.1UFZ 50V -RT-
	C57	515X109T50	CAP-ECX 1UFM 50V -RT-
	C58	5128331552	CAP-CCSL 330PFJ 50V -RT-
	C59	5134104452	CAP-SCF 0.1UFZ 50V -RT-
	C6	7140104214	CAP-X7R 0.1UFM 100V -RT-
	C60	5134104452	CAP-SCF 0.1UFZ 50V -RT-
	C7	5156100T50	CAP-EC6 10UFM 50V -RT-
	C79	5128471552	CAP-CCSL 470PFJ 50V -RT-
	C8	5103102293	CAP-CCE 1000PFM 3KV -SF-
	C9	5104103463	CAP-CCF 0.01UFZ 1.5KV -SF-
	CRT1	457030423H	SOCKET CRT
	D1	413258020U	DIODE BAV20 DO-35 -AT-
	D11	413258020U	DIODE BAV20 DO-35 -AT-
	D12	413258020U	DIODE BAV20 DO-35 -AT-
	D13	413258020U	DIODE BAV20 DO-35 -AT-
	D15	4120141480	DIODE 1N4148 (SI) -AT-
	D16	4120141480	DIODE 1N4148 (SI) -AT-
	D2	413258020U	DIODE BAV20 DO-35 -AT-
	D21	413258020U	DIODE BAV20 DO-35 -AT-
	D22	413258020U	DIODE BAV20 DO-35 -AT-
	D23	413258020U	DIODE BAV20 DO-35 -AT-
	D25	4120141480	DIODE 1N4148 (SI) -AT-
	D26	4120141480	DIODE 1N4148 (SI) -AT-
	D27	4120141480	DIODE 1N4148 (SI) -AT-
	D3	413258020U	DIODE BAV20 DO-35 -AT-
	D31	413010426C	DIODE BYV26C KINK FORMING -AT-
	D32	4120141480	DIODE 1N4148 (SI) -AT-

	REF.	PART NO.	DESCRIPTION
	D33	4120141480	DIODE 1N4148 (SI) -AT-
	D37	4120141480	DIODE 1N4148 (SI) -AT-
	D38	4120141480	DIODE 1N4148 (SI) -AT-
	D39	4120141480	DIODE 1N4148 (SI) -AT-
	D40	4120141480	DIODE 1N4148 (SI) -AT-
	D41	4120141480	DIODE 1N4148 (SI) -AT-
	D42	4120141480	DIODE 1N4148 (SI) -AT-
	D5	4120141480	DIODE 1N4148 (SI) -AT-
	D6	4120141480	DIODE 1N4148 (SI) -AT-
	D7	4120141480	DIODE 1N4148 (SI) -AT-
*	FB1	4322209005	FERRITE BEAD 2UH
	FB10	4322209046	FERRITE BEAD 2UH -AT-
	FB11	4322209046	FERRITE BEAD 2UH -AT-
	FB12	4322209046	FERRITE BEAD 2UH -AT-
	FB13	4322209046	FERRITE BEAD 2UH -AT-
	FB14	4322209046	FERRITE BEAD 2UH -AT-
	FB3	4322209046	FERRITE BEAD 2UH -AT-
	FB4	4322209046	FERRITE BEAD 2UH -AT-
	FB5	4322209046	FERRITE BEAD 2UH -AT-
	FB6	4322209046	FERRITE BEAD 2UH -AT-
	FB7	4322209046	FERRITE BEAD 2UH -AT-
	FB8	4322209046	FERRITE BEAD 2UH -AT-
	FB9	4322209046	FERRITE BEAD 2UH -AT-
	FT1	4050400055	RES-CF 1/4W J 0R -AT-
	FT2	4050400055	RES-CF 1/4W J 0R -AT-
	FT3	4050400055	RES-CF 1/4W J 0R -AT-
	IC1	4159240800	IC LM2408T
	IC2	4159128200	IC LM1282N 28PIN
	IC3	4159393000	IC LM 393 8PIN
	IC4	4159623930	IC M62393P 20PIN
	IC5	4159350450	IC M35045-081
*	L1	4321228006	COIL PEAKING 0.22uH -AT-
*	L31	4321228006	COIL PEAKING 0.22uH -AT-
*	L51	4321478006	COIL PEAKING 0.47UH -AT-
	P1	4491200300	BASE 12P 2.54MM SXB-XH-A
	Q1	4113904220	TRS. BF422 TO-92
	Q10	4111139040	TRS. 2N3904 TO-92 -RT-
	Q11	4111139040	TRS. 2N3904 TO-92 -RT-
	Q12	4116612030	TRS. RN1203 -RT-
	Q2	4113904220	TRS. BF422 TO-92
	Q3	4113904220	TRS. BF422 TO-92
	Q4	4113904230	TRS. BF423 TO-92 -RT-
	Q5	4113904230	TRS. BF423 TO-92 -RT-
	Q6	4113904230	TRS. BF423 TO-92 -RT-
	Q8	4116612030	TRS. RN1203 -RT-
	Q9	4111139040	TRS. 2N3904 TO-92 -RT-
	R10	4060210115	RES-CC 1/2W K 100R -AT-
	R11	4060210115	RES-CC 1/2W K 100R -AT-
	R12	4060210115	RES-CC 1/2W K 100R -AT-
	R13	4060210115	RES-CC 1/2W K 100R -AT-
	R14	4060251315	RES-CC 1/2W K 51K -AT-
	R15	4050518255	RES-CF 1/4W J 1.8K -AT- SMALL
	R16	4050518255	RES-CF 1/4W J 1.8K -AT- SMALL
	R17	4050518255	RES-CF 1/4W J 1.8K -AT- SMALL
	R18	4050547355	RES-CF 1/4W J 47K -AT- SMALL
	R19	4257048251	RES-PR MF 1/4W F 8.25K AT SMAL
	R2	4050510555	RES-CF 1/4W J 1M -AT- SMALL
	R20	4180233955	RES-FUSIBLE 1/2W J 3.3R -AT-
	R21	4050533055	RES-CF 1/4W J 33R -AT- SMALL
	R22	4050539155	RES-CF 1/4W J 390R -AT- SMALL

REF.	PART NO.	DESCRIPTION
R23	4050533055	RES-CF 1/4W J 33R -AT- SMALL
R24	4050539155	RES-CF 1/4W J 390R -AT- SMALL
R25	4050533055	RES-CF 1/4W J 33R -AT- SMALL
R26	4050539155	RES-CF 1/4W J 390R -AT- SMALL
R27	4050533055	RES-CF 1/4W J 33R -AT- SMALL
R28	4050533055	RES-CF 1/4W J 33R -AT- SMALL
R29	4050533055	RES-CF 1/4W J 33R -AT- SMALL
R3	4050512355	RES-CF 1/4W J 12K -AT- SMALL
R30	4050522255	RES-CF 1/4W J 2.2K -AT- SMALL
R31	4050512355	RES-CF 1/4W J 12K -AT- SMALL
R32	4050512355	RES-CF 1/4W J 12K -AT- SMALL
R33	4050512355	RES-CF 1/4W J 12K -AT- SMALL
R34	4050512355	RES-CF 1/4W J 12K -AT- SMALL
R35	4050510155	RES-CF 1/4W J 100R -AT- SMALL
R36	4050510155	RES-CF 1/4W J 100R -AT- SMALL
R37	4050510155	RES-CF 1/4W J 100R -AT- SMALL
* R38	4257047509	RES-PR MF 1/4W F 75R AT SMALL
R39	4257047509	RES-PR MF 1/4W F 75R AT SMALL
R40	4050533055	RES-CF 1/4W J 33R -AT- SMALL
R41	4050547355	RES-CF 1/4W J 47K -AT- SMALL
R42	4257047509	RES-PR MF 1/4W F 75R AT SMALL
R43	4050522255	RES-CF 1/4W J 2.2K -AT- SMALL
R44	4050522255	RES-CF 1/4W J 2.2K -AT- SMALL
R45	4050510455	RES-CF 1/4W J 100K -AT- SMALL
R46	4050522155	RES-CF 1/4W J 220R SMALL -AT-
R47	4050539255	RES-CF 1/4W J 3.9K -AT- SMALL
R48	4050530455	RES-CF 1/4W J 300K SMALL -AT-
R49	4050547355	RES-CF 1/4W J 47K -AT- SMALL
R50	4050568155	RES-CF 1/4W J 680R SMALL -AT-
R51	4180215255	RES-FUSIBLE 1/2W J 1.5K -AT-
R52	4050510155	RES-CF 1/4W J 100R -AT- SMALL
R53	4050510255	RES-CF 1/4W J 1K -AT- SMALL
R54	4050510155	RES-CF 1/4W J 100R -AT- SMALL
R55	4050510255	RES-CF 1/4W J 1K -AT- SMALL
R56	4050551455	RES-CF 1/4W J 510K SMALL -AT-
R57	4050515155	RES-CF 1/4W J 150R SMALL -AT-
R58	4050547355	RES-CF 1/4W J 47K -AT- SMALL
R59	4050510455	RES-CF 1/4W J 100K -AT- SMALL
R6	4050510555	RES-CF 1/4W J 1M -AT- SMALL
R60	4050539155	RES-CF 1/4W J 390R -AT- SMALL
R61	4050510255	RES-CF 1/4W J 1K -AT- SMALL
R62	4050510155	RES-CF 1/4W J 100R -AT- SMALL
R63	4050547355	RES-CF 1/4W J 47K -AT- SMALL
R64	4050547255	RES-CF 1/4W J 4.7K -AT- SMALL
R65	4050547255	RES-CF 1/4W J 4.7K -AT- SMALL
R66	4050513255	RES-CF 1/4W J 1.3K -AT- SMALL
R67	4050510255	RES-CF 1/4W J 1K -AT- SMALL
R68	4050512355	RES-CF 1/4W J 12K -AT- SMALL
R69	4050547355	RES-CF 1/4W J 47K -AT- SMALL
R7	4050512355	RES-CF 1/4W J 12K -AT- SMALL
R70	4050510155	RES-CF 1/4W J 100R -AT- SMALL
R72	4050547355	RES-CF 1/4W J 47K -AT- SMALL
R73	4050522255	RES-CF 1/4W J 2.2K -AT- SMALL
R74	4050582255	RES-CF 1/4W J 8.2K -AT- SMALL
R75	4050522255	RES-CF 1/4W J 2.2K -AT- SMALL
R76	4050112155	RES-CF 1/2W J 120R SMALL -AT-
R77	4050110155	RES-CF 1/2W J 100R SMALL -AT-
R78	4050112155	RES-CF 1/2W J 120R SMALL -AT-
R79	4050547255	RES-CF 1/4W J 4.7K -AT- SMALL
R8	4050510555	RES-CF 1/4W J 1M -AT- SMALL

REF.	PART NO.	DESCRIPTION
R83	4050547355	RES-CF 1/4W J 47K -AT- SMALL
R85	4050510255	RES-CF 1/4W J 1K -AT- SMALL
R86	4050547255	RES-CF 1/4W J 4.7K -AT- SMALL
R87	4050510155	RES-CF 1/4W J 100R -AT- SMALL
R9	4050512355	RES-CF 1/4W J 12K -AT- SMALL
SG2	5106152304	SPARK GAP 1.5KV AG-15 P:5.0mm
ZD2	41205004A2	DIODE ZENER HZ4A2 -AT-
ZD3	41205051AU	DIODE ZENER MTZJ5.1A -AT-

9.4. Control Board

REF.	PART NO.	DESCRIPTION
	UT9H200444 -V	CONTROL PCB ASS'Y
	4141124400	#P.C.B. CONTROL
	C488100026	CONN. 10P & WIRE ASS'Y 200mm FOR P805
D801	4120141480	DIODE 1N4148 (SI) -AT-
D802	4120141480	DIODE 1N4148 (SI) -AT-
LD201	4120600790	LED L-79GCA 4.8¢ 3PIN GRN/YEL
S801	4410604040	KEYSWITCH TACT SKHHAM2520 1KEY
S802	4410604040	KEYSWITCH TACT SKHHAM2520 1KEY
S803	4410604040	KEYSWITCH TACT SKHHAM2520 1KEY
S804	4410604040	KEYSWITCH TACT SKHHAM2520 1KEY

Appendix A – Service Bulletins

SB Number	Subject	SM Revision
V95_001	Engineering Change Notice	2.0
V95_002	Engineering Change Notice	2.0
V95_003	Engineering Change Notice	2.0
V95_004	Engineering Change Notice	2.0
V95_005	Engineering Change Notice	2.0
V95_G790_001	Product Service Information	2.0
V95_G790_002	Engineering Change Notice	2.0
V95_G790_003	Engineering Change Notice	2.0
V95_G790_004	Engineering Change Notice	2.0
V95_G790_005	Engineering Change Notice	2.0
V95_G790_006	Engineering Change Notice	2.0
V95_G790_007	Product Service Information	2.0
V95_G790_008	Product Service Information	2.0
V95_G790_009	Product Service Information	2.0
CKC_001	Product Service Information	2.0

Confidential - Do Not Copy

ViewSonic® Corporation

381 Brea Canyon Road • Walnut, CA 91789 • tel. : (909) 444-8727 • Fax. : (909) 468-1244

Service Bulletin

SB # V95_001

To : Parts Department	**Date:** October 17, 1997
Model # : V95	
Subject: Engineering change notice	
Requested by:	**From :** Tommy W. Jue QC Field Engineer

Purpose:

Correction of wording on the front cover of the user manual.

Change(s):

Description of change	From	To
User Manual and Green software (part #)	**9012199H22**	**9012299H22**

Implementation information:

Cut-in date: Running change.

Field Disposition:

Implementation will be done in the factory.

Note: This information only affects documentation for the user. The change is unrelated to service issues. Parts Department will need to order the revised user manual.

If you have any questions regarding this service bulletin, please contact the Quality Control Department (909)444-8727.

Prepared by Tommy W. Jue
Quality Control Department

ViewSonic® Corporation

381 Brea Canyon Road • Walnut, CA 91789 • tel. : (909) 444-8727 • Fax. : (909) 468-1244

Service Bulletin

SB # V95_002

To : Parts Department	**Date:** October 17, 1997
Model # : V95	
Subject: Engineering change notice	
Requested by:	**From :** Tommy W. Jue QC Field Engineer

Purpose:

Minor printing change for the model number on the box.

Change(s):

Description of change	From	To
Printing of model # on box (part #)	**VCDTS21383-1M** (9001099H22)	**VCDTS21383-1** (9001199H22)

Implementation information:

Cut-in date: Running change.

Field Disposition:

Implementation will be done in the factory.

Note: This information only affects documentation for the user. The change is unrelated to service issues. Parts Department will need to order the revised box for V95 model.

If you have any questions regarding this service bulletin, please contact the Quality Control Department (909)444-8727.

ViewSonic® Corporation

381 Brea Canyon Road • Walnut, CA 91789 • tel. : (909) 444-8727 • Fax. : (909) 468-1244

Service Bulletin

SB # V95_003

To : Parts Department	**Date:** October 29, 1997
Model # : V95	
Subject: Engineering change notice	
Requested by: ViewSonic	**From :** Tommy W. Jue QC Field Engineer

Purpose:

To upgrade video performance.

Change(s):

Description of change	From	To
Neck PCB Assembly (Sub-2)	**UT9H200244-V** (part #)	**VT9H240244-V** (part #)

Implementation information:

Cut-in date: Running change.

Field Disposition:

Implementation will be done in the factory.

Note: Parts Department should exhaust current stock, if any, before using the new board. The exception is when the monitor already has the new board and needs replacement.

If you have any questions regarding this service bulletin, please contact the Quality Control Department (909)444-8727.

Prepared by Tommy W. Jue
Quality Control Department

ViewSonic® Corporation

381 Brea Canyon Road • Walnut, CA 91789 • tel. : (909) 444-8727 • Fax. : (909) 468-1244

Service Bulletin

SB # V95_004

To : Parts Department	**Date:** February 2, 1998
Model # : V95	
Subject: Engineering change notice	
Requested by:	**From :** Tommy W. Jue QC Field Engineer

Purpose:

To add thumb wheel control as an option for 19 in. product.

Change(s):

Description of change	From	To	
IC801 XC68HC705 **(a) Firmware Version** U011 (check sum: 18C3)	**41A9H00U11**	**(a) 41A9H00U12** U012 (check sum: 0C62)	
(b) Mask Version U011 (check sum: 18C3)	**4159687073**	**(b) 4159687077** U012 (check sum: DA08)	
IC804	--	**4159242100**	**IC24L21 8 pin**

Implementation information:

Cut-in date: Running change. Cut-in serial number pending.

Field Disposition:

No reworks expected to be done on existing products. Alignment software will not be affected by this change. Firmware is masked into the ROM.

If you have any questions regarding this service bulletin, please contact the Quality Control Department (909)444-8727.

Prepared by Tommy W. Jue
Quality Control Department

ViewSonic® Corporation

381 Brea Canyon Road • Walnut, CA 91789 • tel. : (909) 444-8727 • Fax. : (909) 468-1244

Service Bulletin

SB # V95_005

To : All authorized service providers	**Date:** May 18, 1998
Model # : V95	
Subject: Engineering change notice	
Requested by:	**From :** Tommy W. Jue Quality Engineer

Purpose:

To use the same degaussing coil and shield as the G790 model.

Change(s):

Description of change	From	P/N	To	P/N
Degaussing Coil		**7020199H20**		**7020199H30**
Top EMI Shield (finger position)		**2012099H10**		**2012197H10**

Field Disposition:

No rework is required.
Cut-in: Running change.

If you have any questions regarding this service bulletin, please contact the Quality Control Department (909) 444-8727.

Prepared by Tommy W. Jue
Quality Control Department

ViewSonic® Corporation

381 Brea Canyon Road • Walnut, CA 91789 • tel. : (909) 444-8727 • Fax. : (909) 468-1244

Service Bulletin

SB # V95_G790_001

To : Walnut Service Center only	**Date:** October 02, 1997
Model # : ViewSonic V95 or G790	
Subject: Product service information	
Requested by:	**From :** Tommy W. Jue QC Field Engineer

Symptom(s):

(1) Video skew visible on top vertical corners of crosshatch pattern at 37kHz/93kHz.
(2) Noise interference at 60kHz in the raster when the OSD is initiated.

Cause(s):

(1) There is some noise interference in the horizontal size and high voltage circuit which causes some units to suffer from skew distortion near the top of the screen for the above horizontal scan rates.
(2) The high voltage DC/DC circuit AC loop gain flyback value is not enough for the given C133 component tolerance.

Countermeasure(s):

Description of change	From	To
L301,L302	**Jump Wire 0.6 (2)**	**Coil 0.68μH (2)**
R389	**215KΩ ¼ Watt F**	**100KΩ ¼ Watt F**
C609	**.033μF 100V**	**.015μF 100V**
C382	**100pF 1KV**	**220pF 1KV**
L101	**8.2μH**	**4.7μH**
R116	**3.3R 1 Watt**	**2.4R 1 Watt**
C104	**0.1μF 100V**	**0.22μF 100V**
L310(Rev. 03) or J207(Rev. 02)	**3μH**	**Jump Wire**

Field Disposition:

ViewSonic® Corporation

381 Brea Canyon Road • Walnut, CA 91789 • tel. : (909) 444-8727 • Fax. : (909) 468-1244

Service Bulletin

SB # V95_G790_001

The above modification shall be *done only* if there is a direct complaint from the customer regarding this issue. Only limited parts kits are available.

If you have any questions regarding this service bulletin, please contact the Quality Control Department (909)444-8727.

ViewSonic® Corporation

381 Brea Canyon Road • Walnut, CA 91789 • tel. : (909) 444-8727 • Fax. : (909) 468-1244

Service Bulletin

SB # V95_G790_002

To : All Authorized Service Providers	**Date:** November 6, 1997
Model # : ViewSonic V95 or G790	
Subject: Engineering Change Notice, FYI only	
Requested by:	**From :** Tommy W. Jue QC Field Engineer

Purpose(s):

Update to main PCB layout. No change in circuit design.

Change(s):

Description of change	From	To
Main PCB (part #)	**4141123103**	**4141123104**

Breakdown of changes:

(1) **Add 3 varistor locations into PCB (for IEEE C62.41 light transient immunity fix). The layout is an additional option, that will not be used at this time.**
(2) **R959 position shifted to keep good distance from VDR1 (varistor).**
(3) **Add J140 marking and a +215V marking beside R943 for TCO.**

Field Disposition:

Reworks not expected to be done on existing products. Implementation will be done in the factory.

If you have any questions regarding this service bulletin, please contact the Quality Control Department (909)444-8727.

ViewSonic® Corporation

381 Brea Canyon Road • Walnut, CA 91789 • tel. : (909) 444-8727 • Fax. : (909) 468-1244

Service Bulletin

SB # V95_G790_003

To : All Authorized Service Providers	**Date:** November 6, 1997
Model # : V95, G790	
Subject: Engineering change notice, FYI	
Requested by:	**From :** Tommy W. Jue QC Field Engineer

Purpose:

Update to video/neck PCB layout for improved production workmanship. No change in circuit design.

Change(s):

Description of change	From	To
Neck PCB (part#)	**4141127500**	**4141127501**

Implementation information:

Cut-in date: Running change.

Field Disposition:

Reworks not expected to be done on existing products. Implementation will be done in the factory.

If you have any questions regarding this service bulletin, please contact the Quality Control Department (909)444-8727.

Prepared by Tommy W. Jue
Quality Control Department

ViewSonic® Corporation

381 Brea Canyon Road • Walnut, CA 91789 • tel. : (909) 444-8727 • Fax. : (909) 468-1244

Service Bulletin

SB # V95_G790_004

To : All Authorized Service Providers	**Date:** May 18, 1997
Model # : V95, G790	
Subject: Engineering change notice	
Requested by:	**From :** Tommy W. Jue Quality Engineer

Purpose:

To ensure B+ voltage does not fall below 78V.

Change(s):

Description of change	From	P/N	To	P/N
R941	**MF ¼W 200KΩ 1%**	**4257042003**	**MF ¼W 110KΩ 1%**	**4257041103**

Field Disposition:

No rework is required. Implementation will be done in the factory.

Cut-in: March 1998 production.

If you have any questions regarding this service bulletin, please contact the Quality Control Department (909) 444-8727.

Prepared by Tommy W. Jue
Quality Control Department

ViewSonic® Corporation

381 Brea Canyon Road • Walnut, CA 91789 • tel. : (909) 444-8727 • Fax. : (909) 468-1244

Service Bulletin

SB # V95_G790_005

To : All Authorized Service Providers	**Date:** May 18, 1997
Model # : V95, G790	
Subject: Engineering change notice	
Requested by:	**From :** Tommy W. Jue Quality Engineer

Purpose:

To eliminate video tailing problem at cold start due to VPS12 tolerance.

Change(s):

Description of change	From	To	P/N
C82 in parallel to R38 and C34	**none**	**2 ± 0.25 pF 50V**	**5121209752**

Field Disposition:

No rework is required. Implementation will be done in the factory. Perform the modification if necessary. The component can bee added to the solder side of the video PCB.

Cut-in: March 1998 production.

If you have any questions regarding this service bulletin, please contact the Quality Control Department (909) 444-8727.

Prepared by Tommy W. Jue
Quality Control Department

ViewSonic® Corporation

381 Brea Canyon Road • Walnut, CA 91789 • tel. : (909) 444-8727 • Fax. : (909) 468-1244

Service Bulletin

SB # V95_G790_006

To : All Authorized Service Providers	**Date:** May 18, 1997
Model # : V95, G790	
Subject: Engineering change notice	
Requested by:	**From :** Tommy W. Jue Quality Engineer

Purpose:

Packaging material change to improve product protection.

Change(s):

Description of change	From	P/N	To	P/N
Foam	**EPS(snow box R)**	**9002099H2C**	**EPO(snow box R)**	**9002099H22**
	EPS(snow box L)	**9003099H2C**	**EPO(snow box L)**	**9003099H22**
Carton		**9001199H22**		**9001299H22**
Pallet	**#A**	**9005099H10**	**Delete**	
	#B	**9006099H10**	**Delete**	
Pallet		**none**		**9005099H2B**

Field Disposition:

No rework is required. Implementation will be done in the factory.

If you have any questions regarding this service bulletin, please contact the Quality Control Department (909) 444-8727.

Prepared by Tommy W. Jue
Quality Control Department

ViewSonic® Corporation

381 Brea Canyon Road • Walnut, CA 91789 • tel. : (909) 444-8727 • Fax. : (909) 468-1244

Service Bulletin

SB # V95_G790_007

To : All Authorized Service Providers	**Date:** May 18, 1997
Model # : V95, G790	
Subject: Product service information	
Requested by:	**From :** Tommy W. Jue Quality Engineer

Purpose:

Update to User Manual and Green software.

Change(s):

Description of change	From	P/N	To	P/N
V95 - manual and green software		**9012299H22**		**9012399H22**
G790 - manual and green software		**9012099H24**		**9012199H24**

Field Disposition:

No rework is required. Implementation will be done in the factory.

Cut-in for V95: July 1998 production.
Cut-in for G790: June 1998 production.

If you have any questions regarding this service bulletin, please contact the Quality Control Department (909) 444-8727.

Prepared by Tommy W. Jue
Quality Control Department

ViewSonic® Corporation

381 Brea Canyon Road • Walnut, CA 91789 • tel. : (909) 444-8727 • Fax. : (909) 468-1244

Service Bulletin

SB # V95_G790_008

To : All Authorized Service Providers	**Date:** May 18, 1997
Model # : V95, G790	
Subject: Product service information	
Requested by:	**From :** Tommy W. Jue Quality Engineer

Purpose:

To add INF diskette.

Change(s):

Description of change	From	To	P/N
V95 – INF. diskette	---		**9015097L12-999**
G790 – INF. diskette	---		**9015097L32-999**

Field Disposition:

No rework is required. Implementation will be done in the factory.

Cut-in: April 1998 production.

If you have any questions regarding this service bulletin, please contact the Quality Control Department (909) 444-8727.

Prepared by Tommy W. Jue
Quality Control Department

ViewSonic® Corporation

381 Brea Canyon Road • Walnut, CA 91789 • tel. : (909) 444-8727 • Fax. : (909) 468-1244

Service Bulletin

SB # V95_G790_009

To : All Authorized Service Providers	**Date:** May 18, 1997
Model # : V95, G790	
Subject: Product service information	
Requested by:	**From :** Tommy W. Jue Quality Engineer

Purpose:

Video performance improvement through enhancement of gain on the high end of the video amplifiers.

Change(s):

Description of change	From	P/N	To	P/N
C54	**22pF J 50V**	**5121220552**	**15pF J 50V**	**5121150552**
FT5, FT6	**Ferrite bead**	**7099159250**	**delete**	
FT4	**Ferrite bead**	**7099159250**	**Ferrite bead 2 μH**	**4322209005**
FT5	**none**		**0 Ω ¼W J**	**4050500055**
FT6	**none**		**Jumper wire**	**5406100000**
L1, L31, L51 (Peaking Coil)	**0.15 μH**	**4321158006**	**0.33 μH**	**4321338006**

Field Disposition:

No rework is required. Implementation will be done in the factory.

Cut-in: Running change.

If you have any questions regarding this service bulletin, please contact the Quality Control Department (909) 444-8727.

Prepared by Tommy W. Jue
Quality Control Department

ViewSonic® Corporation

381 Brea Canyon Road • Walnut, CA 91789 • tel. : (909) 444-8727 • Fax. : (909) 468-1244

Service Bulletin

SB # CKC_001

To : All authorized service providers	**Date:** October 02, 1997
Model # : ViewSonic G800; Optiquest Q71, Q100, V95, and V775-2	
Subject: Product service information	
Requested by:	**From :** Tommy W. Jue QC Field Engineer

Change(s):

ID label change to the above models. This number will appear on the label with all the other regulatory marks.

Cause(s):

New regulation in Taiwan requires an ID label change to show the BCIQ inspection number.

If you have any questions regarding this service bulletin, please contact the Quality Control Department (909)444-8727.